БЪЛГАРСКА АКАДЕМИЯ НА НАУКИТЕ
ТЕОРЕТИЧНА И ПРИЛОЖНА МЕХАНИКА
София, 1985, год. XVI, № 2

BULGARIAN ACADEMY OF SCIENCES
THEORETICAL AND APPLIED MECHANICS
Sofia, 1985, Year XVI, No 2

Bi-frequency Asymptotic Solutions of an Autonomous System in the Case of Resonance of Arbitrary Rank

B. Cheshankov, M. Slavkova

Multifrequency oscillations have been considered by many authors from different points of view. General methods for investigating the oscillation systems have been given but their application to concrete problems encounters sometimes unexpected difficulties and shows in some cases many specific and unknown properties, especially in the resonant cases [2, 3, 4]. In the case of multifrequency oscillations of autonomous systems internal resonance occurs, when between the eigenfrequencies of the system some integer linear relations exist. When investigating oscillation systems in the case of internal resonance some specific phenomena and properties as energy transfer between the normal coordinates and periodic variation of the amplitudes occur. The problem of two nonlineary coupled oscillators in the case of resonance has been considered in [1]. The effect of internal resonance in systems with two degrees of freedom is most clear when the natural coordinates of the visible motion of the system are normal. In [6] all possible cases of resonance of arbitrary rank have been established and the canonical systems, describing the resonant oscillations of order $r+1$ are obtained (r is the rank of resonance). Rank of resonance is the number which shows the power of the resonant terms in the equations of motion. In the present paper we shall employ the method given in [4] to obtain and investigate all canonical systems for bi-frequency oscillations of arbitrary rank r.

1. Equations of motion

When investigating the multifrequency oscillations the following singularity is noticed — the oscillatory system behaves like a system which has as many degrees of freedom as there are eigenfrequencies retained in its motion. According to this we shall consider only a system with two degrees of freedom but the results obtained will be valid for the bi-frequency oscillations of a system with n degrees of freedom (with non-essential changes). This is shown in [6].

Let us consider the system of differential equations

$$\left|\begin{array}{l} \ddot{q}_1+q_1=\varepsilon F_1, \\ \ddot{q}_2+\beta^2 q_2=\varepsilon F_2, \end{array}\right. \tag{1.1}$$

where $F_i=\sum_{k=0}^{r} b^{(i)}_{k,r-k} q_1^k q_2^{r-k}$, $(i=1, 2)$

are homogeneous functions of power r, ε is a small parameter, dots denote t-derivatives and $\beta=\frac{\omega_2}{\omega_1}$.

For the eigenfrequencies ω_1 and ω_2 we assume

$$\omega_1 \leqq \omega_2. \tag{1.2}$$

The possible cases of resonance for the system (1.1), determined in [6] could be given by the nonzero elements of the matrix

$$A=\left\| a_{js}=\frac{r-(2s+j-3)}{j} \right\|, \quad j, s=1, \ldots n, \quad a_{js}=0, \quad \text{for} \quad j+s>n+1, \tag{1.3}$$

where $n=\frac{r}{2}$ for r an even number and $n=\frac{r+1}{2}$ for r an odd number.

The elements under the secondary diagonal of the matrix A are equal to zero, i. e. A is a left triangle matrix. The number of all possible resonances which are determined by the elements of A are: for r an even number

$$N=\frac{r(r+2)}{8}-\sum_{n=0}^{m} nE\left[\frac{r-2n}{2+4n}\right] \quad m=E\left[\frac{r-1}{6}\right]$$

and for r an odd number

$$N=\frac{r^2+7}{8}-\sum_{n=0}^{m} nE\left[\frac{r-(2n+1)}{2n+2}\right] \quad m=E\left[\frac{r-2}{4}\right],$$

where $E[\bullet]$ means the integer part of $\bullet$. When β has exactly or approximately a value equal to one of the nonzero elements of the matrix A there is a resonance in the system.

The elements of the matrix A we shall divide into two groups. In the furst group we include the elements, which appear in the matrix only once. And in the second group we include the elements, which appear in the matrix more than once. This division of the elements is necessary because the resonant solutions obtained for these two groups of possible resonances differ essentially.

2. Canonical systems for the possible resonant cases

We shall consider first resonant solutions of the system (1.1), when $\beta \cong \frac{r-(2s+j-3)}{j}$ and belongs only to the above mentioned group in A.

Let us seek a solution of (1.1) in the form of asymptotic series [4]:

$$\left|\begin{aligned} q_1&=a_1\cos(t-\varphi_1)+\varepsilon q_1^{(1)}+\varepsilon^2 q_1^{(2)}+\ldots,\\ q_2&=a_2\cos(\beta t-\varphi_2)+\varepsilon q_2^{(1)}+\varepsilon^2 q_2^{(2)}+\ldots, \end{aligned}\right. \tag{2.1}$$

where a_1, a_2, φ_1, φ_2 are slowly varying finctions of time which describe the principal harmonics in the solution, while $q_1^{(1)}$, $q_2^{(1)}, \ldots$ describe essentially the higher harmonics in the solution.

After substituting (2.1) in (1.1) we obtain

$$(2.2)\quad \left|\begin{array}{l} (\ddot{a}_1+2a_1\dot{\varphi}_1-a_1\dot{\varphi}_1^2)\cos(t-\varphi_1)+ \\ +(a_1\ddot{\varphi}_1-2\dot{a}_1+2\dot{a}_1\dot{\varphi}_1)\sin(t-\varphi_1)+\varepsilon(\ddot{q}_1^{(1)}+q_1^{(1)})+\ldots=\varepsilon\widetilde{F}_1+\varepsilon^2(\ldots, \\ (\ddot{a}_2+2\beta a_2\dot{\varphi}_2-a_2\dot{\varphi}_2^2)\cos(\beta t-\varphi_2)+ \\ +(a_2\ddot{\varphi}_2-2\beta\dot{a}_2+2\dot{a}_2\dot{\varphi}_2)\sin(\beta t-\varphi_2)+\varepsilon(\ddot{q}_2^{(1)}+\beta^2 q_2^{(1)})+\ldots=\varepsilon\widetilde{F}_2+\varepsilon^2(\ldots, \end{array}\right.$$

where

$$(2.3)\qquad \widetilde{F}_i=\sum_{k=0}^{r} b_{k,r-k}^{(i)}\, a_1^k\, a_2^{r-k}\cos^k(t-\varphi_1)\cos^{r-k}(\beta t-\varphi_2),\quad (i=1,2).$$

After completing the calculations in (2.3) we obtain an expression like

$$\widetilde{F}_i=\sum_{\nu=1}^{\overline{N}}\alpha_\nu^{(i)}\cos(\gamma_\nu^{(i)}t+\delta_\nu^{(i)}),\quad (i=1,\ 2),$$

where $\overline{N}$ is an integer which corresponds to the number of the different arguments $\gamma_\nu^{(i)}t+\delta_\nu^{(i)}$. The $\gamma_\nu^{(i)}$, $\delta_\nu^{(i)}$ and $\alpha_\nu^{(i)}$ will be shown in the following considerations. The terms for which $\gamma_\nu^{(1)}\approx 1$ and $\gamma_\nu^{(2)}\approx\beta$ are resonant.

Let us consider first the case when r is an even number. Then in the first equation of (2.2) there are resonant terms — for $k=r-(j+2i-2)$, $i=1, 2,\ldots s$ — which are

$$\frac{1}{2^{r-1}}\sum_{i=1}^{s}{}' b_{r-(j+2i-2),j+2i-2}^{(1)}\, a_1^{r-(j+2i-2)}\, a_2^{j+2i-2}\binom{r-(j+2i-2)}{s-i}\binom{j+2i-2}{j+i-1}$$
$$\times\cos[(\beta j-r+2s+j-2)t+(r-j-2s+2)\varphi_1-j\varphi_2]$$
$$+\frac{1}{2^{r-1}}\sum_{i=1}^{s-1}{}' b_{r-(j+2i-2),j+2i-2}^{(1)}\, a_1^{r-(j+2i-2)}\, a_2^{j+2i-2}\binom{r-(j+2i-2)}{r-(j+s+i-3)}\binom{j+2i-2}{i-1}$$
$$\times\cos[(\beta j-r+2s+j-4)t+(r-j-2s+4)\varphi_1-j\varphi_2].$$

In the second equation of (2.2) there are also resonant terms — for $k=r-(j+2i-3)$, $i=1,\ 2\ldots s$ — which are

$$\frac{1}{2^{r-1}}\sum_{i=1}^{s}{}' b_{r-(j+2i-3),j+2i-3}^{(2)}\, a_1^{r-(j+2i-3)} a_2^{j+2i-3}\binom{r-(j+2i-3)}{r-(j+s+i-3)}\binom{j+2i-3}{i-1}$$
$$\times\cos[(\beta j-\beta-r+2s-j-3)t+(r-2s-j+3)\varphi_1-(j-1)\varphi_2]+$$
$$\frac{1}{2^{r-1}}\sum_{i=2}^{s}{}' b_{r-(j+2i-3),j+2i-3}^{(2)}\, a_1^{r-(j+2i-3)}\, a_2^{j+2i-3}\binom{r-(j+2i-3)}{s-i}\binom{j+2i-3}{j+i-1}$$
$$\times\cos[(\beta j+\beta-r+2s+j-3)t+(r-2s-j+3)\varphi_1-(j+1)\varphi_2].$$

Let us introduce the new variable

$$(2.4)\qquad \lambda=\{j\beta-[r-(2s+j-3)]\}t+[r-(2s+j-3)]\varphi_1-j\varphi_2.$$

We have the following trigonometrical identities

$$\begin{aligned}
&\cos\{[j\beta-r+(2s+j-3)+1]t+[r-(2s+j-3)-1]\varphi_1-j\varphi_2\}\\
&\quad=\cos\lambda\cos(t-\varphi_1)-\sin\lambda\sin(t-\varphi_1),\\
&\cos\{[j\beta-r+(2s+j-3)-1]t+[r-(2s+j-3)+1]\varphi_1-j\varphi_2\}\\
&\quad=\cos\lambda\cos(t-\varphi_1)+\sin\lambda\sin(t-\varphi_1),\\
&\cos\{[j\beta-r+(2s+j-3)-\beta]t+[r-(2s+j-3)]\varphi_1-(j-1)\varphi_2\}\\
&\quad=\cos\lambda\cos(\beta t-\varphi_2)+\sin\lambda\sin(\beta t-\varphi_2),\\
&\cos\{[j\beta-r+(2s+j-3)+\beta]t+[r-(2s+j-3)]\varphi_1-(j+1)\varphi_2\}\\
&\quad=\cos\lambda\cos(\beta t-\varphi_2)-\sin\lambda\sin(\beta t-\varphi_2).
\end{aligned}\tag{2.5}$$

Now, employing (2.5) and equating the coefficients of $\cos(t-\varphi_1)$, $\sin(t-\varphi_1)$, $\cos(\beta t-\varphi_2)$, $\sin(\beta t-\varphi_2)$ in (2.2) we obtain the system

$$\begin{aligned}
\frac{da_1}{\varepsilon dt}&=\frac{\sin\lambda}{2r}\Bigg\{\binom{j+2s-2}{j+s-1}b^{(1)}_{r-(j+2s-1),\,j+2s-1}a_1^{r-(j+2s-2)}a_2^{j+2s-2}\\
&+\sum_{i=1}^{s-1}\Bigg[\binom{r-(j+2i-2)}{s-1}\binom{j+2i-2}{j+i-1}\\
&-\binom{r-(j+2i-2)}{r-(j+s+i-3)}\binom{j+2i-2}{i-1}\Bigg]b^{(1)}_{r-(j+2i-2),\,j+2i-2}a_1^{r-(j+2i-2)}a_2^{j+2i-2}\Bigg\}.\\
\frac{da_2}{\varepsilon dt}&=-\frac{\sin\lambda}{\beta\,2^r}\Bigg\{\binom{r-j+1}{r-j-s+2}b^{(2)}_{r-(j-1),j-1}a_1^{r-(j-1)}a_2^{j-1}\\
&+\sum_{i=2}^{s}\Bigg[\binom{r-(j+2i-3}{r-(j+s+i-3)}\binom{j+2i-3}{i-1}\\
&-\binom{r-(j+2i-3)}{s-i}\binom{j+2i-3}{j+i-1}\Bigg]b^{(2)}_{r-(j+2i-3),j+2i-3}a_1^{r-(j+2i-3)}a_2^{j+2i-3}\Bigg\}\\
\frac{d\varphi_1}{\varepsilon dt}&=\frac{\cos\lambda}{2r}\Bigg\{\binom{j+2s-2}{j+s-1}b^{(1)}_{r-(j+2s-2),j+2s-2}a_1^{r-(j+2s-2)}a_2^{j+2s-2}\\
&+\sum_{i=1}^{s-1}\Bigg[\binom{r-(j+2i-2)}{s-i}\binom{j+2i-2}{j+i-1}\\
&+\binom{r-(j+2i-2)}{r-(j+s+i-3)}\binom{j+2i-2}{i-1}\Bigg]b^{(1)}_{r-(j+2i-2),j+2i-2}a_1^{r-(j+2i-2)}a_2^{j+2i-2}\Bigg\}\\
\frac{d\varphi_2}{\varepsilon dt}&=\frac{\cos\lambda}{\beta 2^r}\Bigg\{\binom{r-j+1}{r=j-s+2}b^{(2)}_{r-(j-1),j-1}a_1^{r-(j-1)}a_2^{j-1}\\
&+\sum_{i=2}^{s}\Bigg[\binom{r-(j+2i-3)}{r-(j+s+i-3)}\binom{j+2i-3}{i-1}\\
&+\binom{r-(j+2i-3)}{s-i}\binom{j+2i-3}{j+i-1}\Bigg]b^{(2)}_{r-(j+2i-3),j+2i-3}a_1^{r-(j+2i-3)}a_2^{j+2i-3}\Bigg\}.
\end{aligned}\tag{2.6}$$

Equating the remaining terms in (2.2) with equal powers of ε we can obtain systems for $q_1^{(1)}, q_2^{(1)}, \ldots$ As we shall seek only the first order solution and because the functions $q_1^{(1)}, q_2^{(1)}, \ldots$ give corrections from higher order, we shall not consider these systems.

Further we shall bound our considerations only to conservative systems. For the conservative systems there exist the following relations between the coefficients of F_1 and F_2 —

$$kb^{(1)}_{n-k,k}=(n-k+1)\,b^{(2)}_{n-k+1,k-1}, \quad (n,\ k=1,\ 2,\ \ldots\ r). \tag{2.7}$$

Taking into account (2.7) the first two equations of (2.6) have the integral

$$a_1^2+\beta^2 a_2^2=C_0^2, \tag{2.8}$$

where C_0 is a constant of integration.

The integral (2.8) shows, that if one amplitude increases, the other decreases. The expression (2.8) corresponds to the integral of energy for the conservative system.

Taking into account (2.4), (2.7) and (2.8) from the system (2.7) we obtain the canonical system for the considered resonant case

$$\left|\begin{aligned}
&\frac{da}{du}=-a^{j-1}(1-a^2)^{\frac{r-(j+2s-3)}{2}}P_{s-1}(a^2)\sin\lambda,\\
&\frac{d\lambda}{du}=2m+a^{j-2}(1-a^2)^{\frac{r-(j+2s-1)}{2}}Q_s(a^2)\cos\lambda,
\end{aligned}\right. \tag{2.9}$$

where

$$a=\frac{\beta a_2}{C_0},\quad u=\frac{j(j+2s-3)!}{(s-1)!\,(j+s-1)!\,2^r\beta^{j-1}}b^{(2)}_{r-(j+2s-3),j+2s-3}\,\varepsilon t,$$

$$P_{s-1}(a^2)=\sum_{i=1}^{s}M_i(1-a^2)^{s-i}a^{2i-2},$$

$$Q_s(a^2)=\sum_{i=1}^{s}M_i[(r+1)a^2-(j+2i-2)]\,(1-a^2)^{s-i}\,a^{2i-2}$$

$$M_i=\frac{(r-j-2i+3)!\,(j+2i-3)!\,(s-1)!\,(j+s-1)!}{(s-i)!\,(i-1)!\,(j+i-1)!\,(r-j-s-i+3)!\,(j+2s-3)!}\,b_{r-(j+2i-3),j+2i-3}$$

and the parameters of the system are

$$2m=\frac{i\beta-[r-(2s+j-3)]}{\varepsilon}\,\frac{d\varepsilon t}{du}$$

$$b_{r-(j+2i-3),j+2i-3}=\frac{b^{(2)}_{r-(j+2i-3),j+2i-3}}{\beta^{2(i-1)}b^{(2)}_{r-(j+2s-3),j+2s-3}},\quad (i=1,\ 2,\ \ldots,\ s-1).$$

The resonant solutions of the system (1.1) are wholy described by the canonical system (2.9).

A system of the form (2.9), where the number of the variables and parameters is minimal, is called canonical for the considered resonant case.

The number of the parameters in the canonical system (2.9) for r an even number coincides with the number of the column of the matrix A, which is here, there exists the element whose value is equal to β.

The canonical system (2.9) has the integral

$$ma^2 - a^j(1-a^2)^{\frac{r-(j+2s-3)}{2}} P_{s-1}(a^2)\cos\lambda = C, \tag{2.10}$$

where C is a constant of integration.

The canonical system (2.9) and its integral (2.10) are valid for r an even number. Let us consider now the case, when r is an odd number. Then besides the resonant terms for r even number there are other resonant terms, which for the first equation of (2.2) are $\frac{r+1}{2}$ for $k = 1, 3, 5, \ldots r-2, r$ and have the form

$$\frac{1}{2^{r-1}} \sum_{i=1}^{\frac{r+1}{2}} \binom{2i-1}{i} \binom{r-2i+1}{\frac{r-2i+1}{2}} b^{(1)}_{2i-1,r-2i+1} a_1^{2i-1} a_2^{r-2i+1} \cos(t-\varphi_1).$$

For the second equation in (2.2) the new resonant terms are also $\frac{r+1}{2}$ and for $k=0, 2, 4, \ldots r-3, r-1$ have the form

$$\frac{1}{2^{r-1}} \sum_{i=1}^{\frac{r+1}{2}} \binom{2i-2}{i-1} \binom{r-2i+2}{\frac{r-2i-1}{2}} b^{(2)}_{2i-1,r-2i+2} a_1^{2i-2} a_2^{r-2i+2} \cos(\beta t-\varphi_2).$$

These terms change the third and the fourth equations of the system (2.6), and the second equation in the canonical system (2.9). Now in the second equation in (2.9) the $\frac{d\lambda}{du}$ summands

$$\frac{C_0^{r-1}}{2^r\beta^r}\left[\binom{r}{\frac{r+1}{2}}(r-j-2s+3)b^{(1)}_{r,0} - \frac{j}{\beta}\binom{r-1}{\frac{r-1}{2}} b^{(2)}_{r-1,1}\right] \tag{2.11}$$

$$+\frac{C_0^{r-1}}{2^r} \sum_{i=0}^{\frac{r+1}{2}} \sum_{\substack{\nu=0 \\ (\nu\neq\frac{r-1}{2})}}^{i-1} (-1)^{i-\nu-1}\binom{i-1}{\nu}\left[\frac{(r-j-2s+3)(r-2i+2)}{2i-1}\binom{2i-1}{i}\binom{r-2i+1}{\frac{r-2i+1}{2}}\beta^{2i-1}\right.$$

$$\left. -\binom{2i-2}{i-1}\binom{r-2i+2}{\frac{r-2i+3}{2}} j\beta^{2i-2}\right] b_{2i-2,\,r-2i+2}\, a^{r-2\nu-1}$$

are added. The expression (2.11) is a polynomial of power $\frac{r-1}{2}$. Its coefficients we shall denote by $\mu_{2k}\left(k=1, 2, \ldots \frac{r-1}{2}\right)$. So for an r which is an odd number we obtain the following canonical system

$$
(2.12)\qquad
\left|\begin{aligned}
&\frac{da}{du} = -\,a^{j-1}(1-a^2)^{\frac{r-(j+2r-3)}{2}} P_{s-1}(a^2)\sin\lambda,\\
&\frac{d\lambda}{du} = 2\bar{m} + \sum_{k=1}^{\frac{r-1}{2}}{}' \mu_{2k} a^{2k} + a^{j-2}(1-a^2)^{\frac{r-(j+2s-1)}{2}} Q_s(a^2)\cos\lambda,
\end{aligned}\right.
$$

where u, a, λ are the same as in (2.9), and the parameters in the system are

$$
2\bar{m} = \left\{\frac{j\beta-[r-(2s+j-3)]}{\varepsilon} + \frac{C_0^{r-1}}{2^r}\left[\binom{r}{\frac{r+1}{2}}[r-(2s+j-3)]\,b_{r,0}^{(1)} - \frac{j}{\beta}\binom{r-1}{\frac{r-1}{2}} b_{r-1,1}^{(2)}\right]\right\}\frac{d\varepsilon t}{du}
$$

and μ_{2k} are determined by (2.11) after reduction. The polynomials $P_{s-1}(a^2)$ and $Q_s(a^2)$ are the same as in (2.9).

The number of the parameters in (2.12) for an r which is an odd number is equal to $\frac{r+1}{2}$ and does not depend on the place which has the element of A egual to β.

The canonical system (2.12) has the integral

$$
(2.13)\qquad \bar{m}a^2 + \sum_{k=1}^{\frac{r-1}{2}}{}' \frac{\mu_{2k}}{2k+2} a^{2k+2} - a^j(1-a^2)^{\frac{r-(2s+j-3)}{2}} P_{s-1}(a^2)\cos\lambda = C,
$$

where C is a constant of integration.

Let us note that the canonical systems (2.9) and (2.12) for $s=1$ (for the first column of A) are valid also for non-conservative systems, because in this case there is only one resonant term in each of the equations in (2.2), and the integral (2.8) exists independent of the conservativity or non-conservativity of the system.

3. Investigation of the canonical systems

Les us consider in detail the systems (2.9) and (2.12). It is convenient to do this in the phase plane (XY), where $X=a\cos\lambda$ and $Y=a\sin\lambda$, so a and λ are natural polar coordinates in (XY). Because of (2.8) all phase trajectories lie within or on the unit circle. From the expressions (2.10) and (2.13) it follows that all phase trajectories are symmetric with respect to the axis OX.

By the conditions $\frac{da}{du}=0$ and $\frac{d\lambda}{du}=0$ we obtain three types of singular points:

— type A — which lie on the axis OX;

— type B — which lie on the unit circle;

— type C — which lie on an internal circle (with radius smaller than 1).

The abscissas of the singular points of type A are determined by the roots of the equation

$$
(3.1)\qquad 2m \pm x^{j-2}(1-x^2)^{\frac{r-(2s+j-1)}{2}} Q_s(x^2) = 0, \quad x\in[-1,\,1],
$$

where j, $s=1,\,2,\ldots\frac{r}{2}$ for an r which is an even number and by the equation

$$(3.2)\qquad 2\bar{m}+\sum_{k=1}^{\frac{r-1}{2}}\mu_{2k}x^{2k}\pm x^{j-2}(1-x^2)^{\frac{r-(2s+j-1)}{2}}Q_s(x^2)=0,\quad x\in[-1,1],$$

where $j,\ s=1,\ 2,\ldots\frac{r+1}{2}$ for an r which is an odd number.

A visual representation of the disposition of the singular points of type A and their motion, when the parameters of the canonical systems vary, can be obtained by the graphical solution of the equations (3.1) and (3.2).

From the canonical systems (2.9) and (2.12) we have the following theorems:

Theorem 3.1. The origin (0, 0) is a singular point if the element of the matrix A is in any column of the matrix except in the first column.

Theorem 3.2. For bi-frequency oscillations in the case of resonance of arbitrary rank r, the maximal number of singular points of type A is equal to the rank r.

She curve $\varphi(a,\ \lambda)=0$ is called singular curve for the canonical system if every point of this curve is a singular point of the system.

Theorem 3.3. If the conditions:
$r-(2s+j-1)\neq 0$, $m=0$ for an r which is an even number and $r-(2s+j-1)\neq 0$, $\bar{m}=-\frac{1}{2}\sum_{k=1}^{\frac{r-1}{2}}\mu_{2k}$ for an r which is an odd number are satisfied, the unit circle is a singular curve.

The radii R_i of the circles, where the singular points of type C lie, are determined by the zeros of the polynomial $P_{s-1}(a^2)$, if they are in the interval [0, 1]. The polar angles are determined for an r which is an even number by

$$(3.3)\qquad \cos\lambda=-\frac{2m}{R_i^{j-2}(1-R_i^2)^{\frac{r-(2s+j-1)}{2}}Q_s(R_i^2)}$$

and for an r which is an odd number by

$$(3.4)\qquad \cos\lambda=-\frac{2\bar{m}+\sum_{k=1}^{\frac{r-1}{2}}\mu_{2k}R_i^{2k}}{R_i^{j-2}(1-R_i^2)^{\frac{r-(j+2s-1)}{2}}Q_s(R_i^2)}.$$

Theorem 3.4. For bi-frequency oscillations in the case of resonance of arbitrary rank r, the maximal number of singular points of type C is equal to $r-2$, for an r which is an even number, and $r-3$ for an r which is an odd number.

The solution of the system (1.1) for resonances determined by elements in the matrix A which stay in one column have many common characteristic features. The qualitative investigation of the phase trajectories for all the cases in one column can be made only for one representative.

We shall study in detail the phase trajectories of the system (1.1) in the case of resonance of rank $r=6$ and $r=7$.

Let $r=6$. Then the possible resonant cases of the system are given by the elements of the matrix

$$A_6=\left\|\begin{array}{ccc} 6 & 4 & 2 \\ \frac{5}{2} & \frac{3}{2} & 0 \\ \frac{4}{3} & 0 & 0 \end{array}\right\|.$$

When we consider the resonances determined by the elements of the first column of A_6, the canonical system (2.9) depends only on one parameter — m — the detuning of the system. Let $\beta\cong 6$. Then the abscissas of the singular points of type A are determined by the equation (3.1), whose graphical solution is shown in Fig. 1. For $m\in(-\infty, m_1)$ there is only one singular point of type A, which comes from the origin and moves to the left. The picture of the phase trajectories (for such a case — $m=-2$) is shown in Fig. 2. For $m=m_1=-0{,}422$ (boundary case) appears a second singular point of type A on the positive semi-axis OX from which, when $m>m_1$, two singular points of

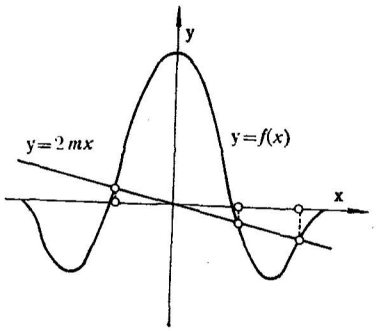

Fig. 1

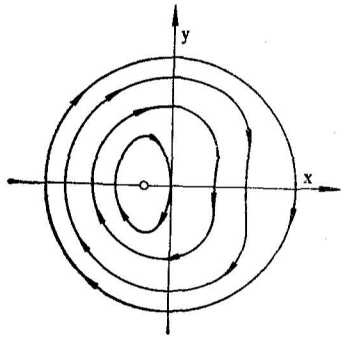

Fig. 2

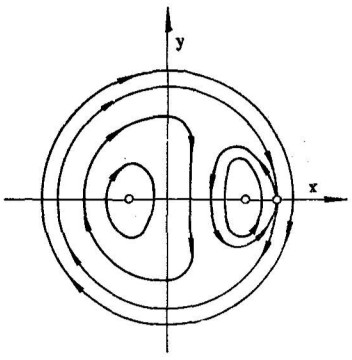

Fig. 3

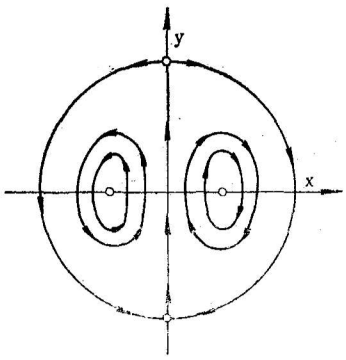

Fig. 4

type A disjoin — one which moves to the left and another which moves to the right (Fig. 3 — for $m=0{,}2$). As it can be seen from Fig. 3, the right singular point is a saddle point. For $m=0$ it reaches the unit circle and on the unit circle there appear two singular points of type B. For the $m=0$ case the

picture of the phase trajectories is shown in Fig. 4. It is symmetric with respect also to the axis OY. This symmetry with respect to either axes (OX and OY) for $m=0$ is valid for every resonant case of even arbitrary rank. For some values of the parameters of the canonical systems pictures of phase trajectories like the

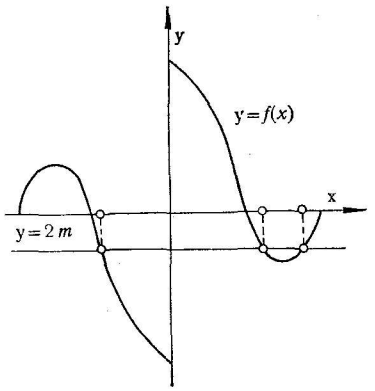

Fig. 5

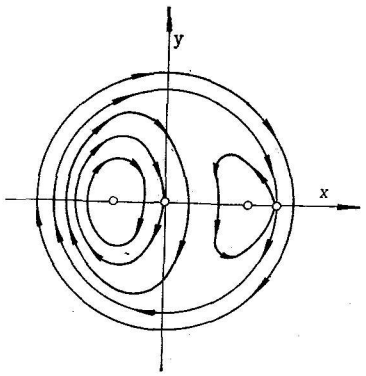

Fig. 6

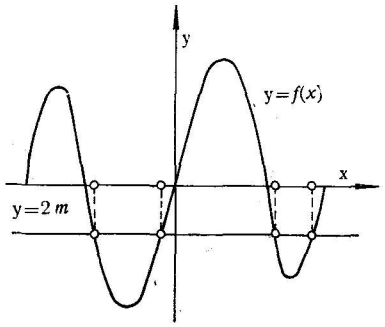

Fig. 7

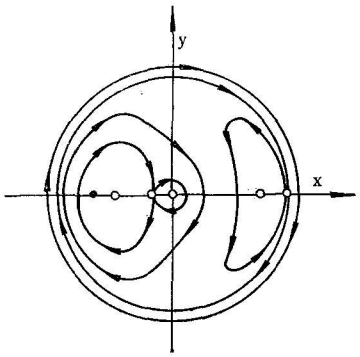

Fig. 8

ones for $\beta\cong 6$ and $r=6$ are obtained for all possible resonant cases of arbitrary rank.

In [5] a detailed investigation of a mechanical system, which is described by the system (1.1) for $r=3$ and $\beta\approx 3$, is given and such pictures of phase trajectories are shown.

Let $\beta\cong\frac{5}{3}$. Then the abscissas of the singular points of type A are determined by (3.1). Its graphical solution is shown in Fig. 5. The function $y=f(x)$ is discontinuous for $X=0$. This is valid for every resonant case which is determined by an element from an even row of the matrix A. The origin (0, 0) is a singular point for every value of the parameter m. For some m it is a center and for other m it is a non-elementary nonstable singular point. From Fig. 5 it is clear that the singular points of type A are maximally four and in Fig. 6 such a picture (for $m=-0{,}2$) for the phase trajectories is shown.

For the case $\beta\cong\frac{4}{3}$ the motion of the singular points of type A for the variation of the parameter m can be seen in Fig. 7. When their number is

maximal (five for this case) a picture of the phase trajectories is shown in Fig. 8 (for $m=-0{,}1$).

Summing up we can say that when resonance is determined by an element from the first column of A, the singular points of type A are maximally five.

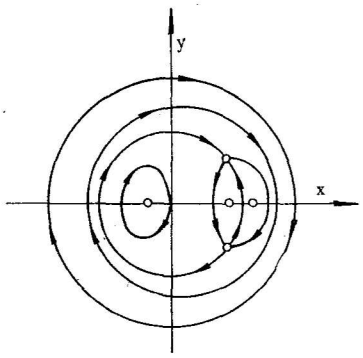

Fig. 9

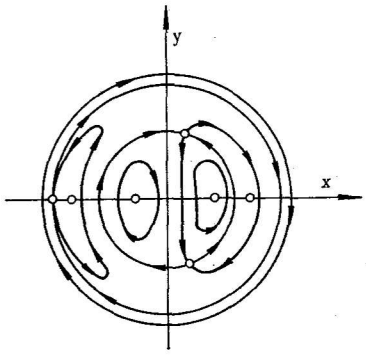

Fig. 10

There are no singular points of type C and the singular points of type B appear only for $m=0$, when the entire unit circle turns into a singular curve.

Let us note again that the results obtained for the first column of A_6 are valid also for non-conservative systems.

Let us show now pictures of phase trajectories which refer to resonances determined by elements from the second column of the matrix A_6. In the canonical system (2.9) the polynomials $P_1(a^2)$ and $Q_2(a^2)$ have the form

$$P_1(a^2)=1-\alpha_1 a^2,$$

$$Q_2(a^2)=-7\alpha_1 a^4+[5+\alpha_1(j+2)]a^4-j,$$

where

$$\alpha_1=1-\frac{jb^{(2)}_{5-j,j+1}}{\beta^2(7-j)b^{(2)}_{7-j,j-1}}, \quad (b^{(2)}_{7-j,\,j-1}\neq 0), \quad j=1,\ 2.$$

So the canonical system (2.9) in this case depends on two parameteres — m and α_1.

When $\alpha_1\leqq 1$ the results of the investigations coincide qualitatively with the previous investigations for the first column of A_6. More interesting are the cases when $\alpha_1>1$. From (3.3) the polar angles of the singular points of type c can be obtained. They lie on an internal circle with a radius $R_1=\frac{1}{\sqrt{\alpha_1}}$. Let $\alpha_1=5$. Then $R_1=\frac{1}{\sqrt{\alpha_1}}$ and in Fig. 9 the picture of the phase trajectories (for $m=-1$, $\alpha_1=5$, $j=1$) is shown when the singular points of type A are three. In Fig. 10 is shown the picture when the singular points of type A are five ($m=-0{,}2$, $\alpha_1=5$, $j=1$). For $m=0$, $\alpha_1=5$ we again obtain the symmetric picture (Fig. 11) of the phase trajectories.

For the resonant cases, determined by the second column of the matrix A_6, the most characteristic feature is the appearance of singular points of type C, which lie on an internal circle.

The investigation of the canonical systems for resonance, which is determined by an element from the third column in A_6 is very complicated, because

the canonical systems depend on three parameters — m, α_1, α_2. The polynomials of the canonical system (2.9) now are

$$P_2(a^2)=1-2\alpha_1 a^2+(2\alpha_1-\alpha_2-1)a^4,$$

$$Q_3(a^2)=7(2\alpha_1+\alpha_2-1)a^6-5(4\alpha_1+\alpha_2-1)a^4+3(2\alpha_1+1)a^2-1,$$

where

$$\alpha_1=1-\frac{2b^{(2)}_{4,2}}{15\beta^2 b^{(2)}_{6,0}}, \quad \alpha_2=\frac{2b^{(2)}_{2,4}}{15\beta^4 b^{(2)}_{6,0}}.$$

The parameters α_1 and α_2 determine the number of the internal circles on which the singular points of type C lie. These circles cannot be more than two. In Fig. 12 a case, when only one internal circle exists (for $m=-1$, $\alpha_1=4$, $\alpha_2=-3$) is shown. The internal circle has a radius $R_1=0{,}364$. In Fig. 13 a case, when two internal circles exist ($m=-0{,}5$, $\alpha_1=4$, $\alpha_2=1$), is shown. They have radii $R_1=0{,}37$ and $R_2=0{,}925$. In this case the singular points of type A

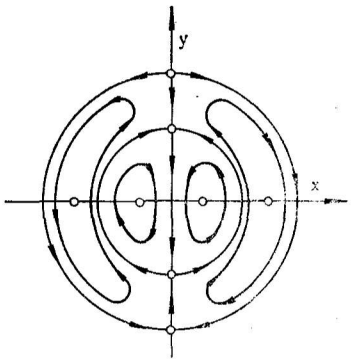

Fig. 11

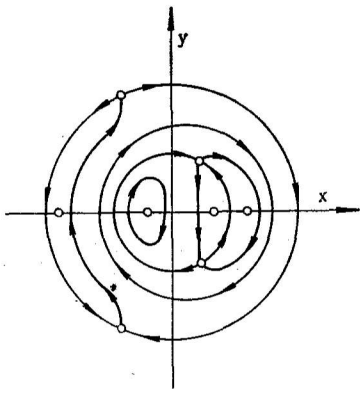

Fig. 12

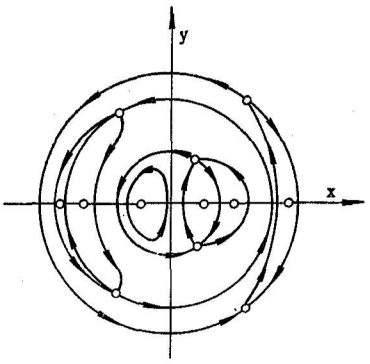

Fig. 13

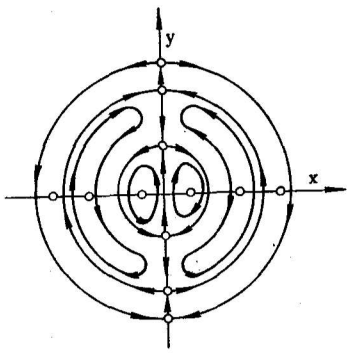

Fig. 14

are maximal — six. When $m=0$ we again obtain a symmetric picture and for $m=0$, $\alpha_1=4$, $\alpha_2=1$ this case in shown in Fig. 14.

When the resonance is determined by elements in the third column of the matrix A_6 there exist intervals of variation of the parameters of the system

for which singular points of type B and of type C appear. The singular points of type C can lie on two internal circles. The singular points of type A and all singular points now reach their maximal number.

Summing up we have the theorem:

Theorem 3.5. The maximal number of singular points for the bi-frequency oscillations of a rank $r=6$ is 12 (6 of type A, 2 of type B and 4 of type C).

The pictures of phase trajectories for r, which is an even number, and for $m\in(0,\infty)$ are mirror images with respect to OY of the pictures for $m\in(-\infty,0)$.

Let $r=7$. Then the possible resonances are given by the nonzero elements of the matrix

$$A_7=\begin{Vmatrix} 7 & 5 & 3 & 1 \\ 3 & 2 & 1 & 0 \\ \frac{5}{3} & 1 & 0 & 0 \\ 1 & 0 & 0 & 0 \end{Vmatrix}$$

The canonical systems for $\beta\cong 3$ and $\beta\cong 1$ cannot be obtained from (2.12), because these elements appear more than once in the matrix A_7. We shall consider the case $\beta\cong 3$ in the following section. The investigation of the other possible resonances shows that the canonical systems in all cases depend on four parameters. The pictures of the phase trajectories are analogous to the pictures obtained for $r=6$. The main difference is the following: because of the expression $\sum_{k=1}^{\frac{r-1}{2}}\mu_{2k}a^{2k}$ in (2.12) and (2.13) there is no symmetry for the variation of the parameter m with respect to its zero-value (while there was a symmetry for r, which is an even number).

4. Resonant solutions of the system (1.1) for $r=7$ and $\beta\cong 3$

As we noticed, the element $\beta\cong 3$ appears in the matrix A_7 two times — in the first column and in the third column. In order to obtain the canonical system in this case we follow the way shown in section 2 for $r=7$ and $\beta\cong 3$, but taking into account that β appears both in the first and in the third column. Now, the first and the second equations in (2.2) have six resonant terms each. So we obtain

$$(4.1)\quad \begin{cases} \dfrac{da}{du}=-\gamma_1 a(1-a^2)^3\sin 2\lambda-(1-a^2)^{\frac{3}{2}}[1-2\alpha_1 a^2+(2\alpha_1+\alpha_2-1)a^4]\sin\lambda, \\ \dfrac{d\lambda}{du}=2\overline{m}+\sum_{k=1}^{3}\mu_{2k}a^{2k}+\gamma_1(1-a^2)^2(4a^2-1)\cos 2\lambda \\ \quad +\dfrac{1}{a}(1-a^2)^{\frac{1}{2}}\{8(2\alpha_1+\alpha_2-1)a^6+[5(1-\alpha_1]-22\alpha_1]a^4+2(2+3\alpha_1)a^2-1\}\cos\lambda, \end{cases}$$

where

$$a=\frac{\beta a_2}{C_0},\quad u=\frac{27}{2^7}C_0^6 b_{7,0}^{(2)}\varepsilon t,\quad (b_{7,0}^{(2)}\neq 0),\quad \lambda(\beta-3)t+3\varphi_1-\varphi_2,$$

$$\mu_2 = 675\alpha_2 - 7{,}5\gamma_1$$
$$\mu_4 = 1{,}03(1-\alpha_1) - 1350\alpha_2 + 7{,}5\gamma_1$$
$$\mu_6 = 0{,}13 - 1{,}03(1-\alpha_1) + 675\alpha_2 - 2{,}5\gamma_1.$$

Now the parameters of the system are

$$2m = \left[\frac{\beta-3}{\varepsilon} + \frac{C_0^6}{2^7}\left(105 b_{7,0}^{(1)} - \frac{20}{3} b_{6,1}^{(2)}\right)\right]\frac{d\varepsilon t}{du},$$

$$\alpha_1 = 1 - \frac{5 b_{5,2}^{(1)}}{42\beta^2 b_{7,0}^{(2)}},$$

$$\alpha_2 = \frac{2 b_{3,4}^{(2)}}{21\beta^4 b_{7,0}^{(2)}}, \quad \gamma_1 = \frac{10 b_{6,1}^{(2)}}{21 b_{7,0}^{(2)}}.$$

The system (4.1) has the integral

4.2)
$$\overline{m}a^2 + \sum_{k=1}^{3} \frac{\mu_{2k}}{2k+2} a^{2k+2} - \frac{1}{2}\gamma_1 a^2(1-a^2)^3 \cos 2\lambda$$
$$- a(1-a^2)^{\frac{3}{2}} [1 - 2\alpha_1 a^2 + (2\alpha_1 + \alpha_2 - 1)a^4] \cos\lambda = C,$$

where C is a constant of integration.

Now, when investigating the system (4.1) we see that for r, which is an odd number, the first two summands in the second equation of the system always exist. The first summand in the first equation and the third summand in the second equation are inherent for the resonance determined by an element in the first column of A_7, while the remaining summands in the equations are inherent for a resonance determined by an element in the third column of A_7.

The variation of the parameters in the system (4.1) — $\overline{m}$, α_1, α_2, γ_1 leads to different resonant solutions of the system (1.1). The possibilities for variation of the parameters here are very wide, but we shall choose only one typical case in which the mutual influence between the element β in the first and in the third column of A_7 becomes apparent.

If $\gamma_1 = 0$, then (4.1) behaves like a system in the case of resonance which is determined by an element in the third column of A_7. If γ_1 has a high value, then (4.1) behaves like a system in the case of resonance which is determined by an element in the first column of A_7. Therefore we set $\gamma_1 = 10$ (so, there is not any domination of any of the columns) and $\alpha_1 = 1$, $\alpha_2 = 0$ (to simplify some expressions). Now we obtain $\mu_2 = -75$, $\mu_4 = 75$, $\mu_6 = 24{,}86$.

By the conditions $\frac{da}{du} = \frac{d\lambda}{du} = 0$ we obtain the singular points:

— of type A, which are established as roots of the equation

(4.3)
$$f(x) = -\sum_{k=1}^{3} \mu_{2k} x^{2k+1} - 10x(1-x^2)^2(4x^2-1) - (1-x^2)^{\frac{5}{2}}(8x^2-1),$$
$$y = 2\overline{m}x, \quad x \in [-1, 1],$$

whose graphical solution is shown in Fig. 15;

— of type B, which lie on the unit circle;

— of type D, which lie on a curve (not on an internal circle as the singular points of type C), whose equation is

$$20a\cos\lambda + (1-a^2)^{\frac{1}{2}} = 0. \tag{4.4}$$

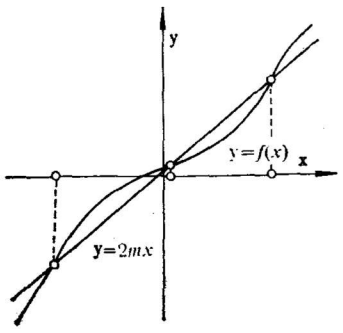

Fig. 15

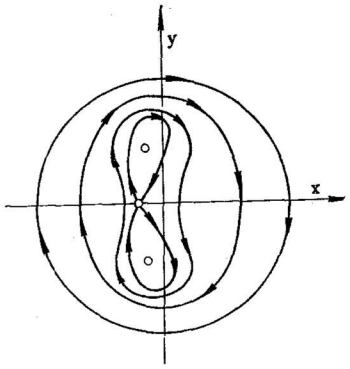

Fig. 16

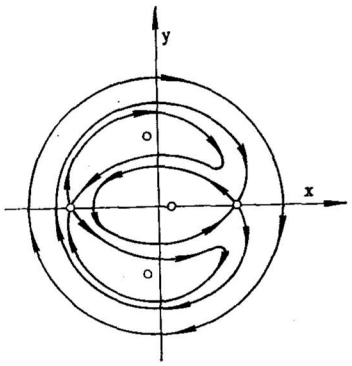

Fig. 17

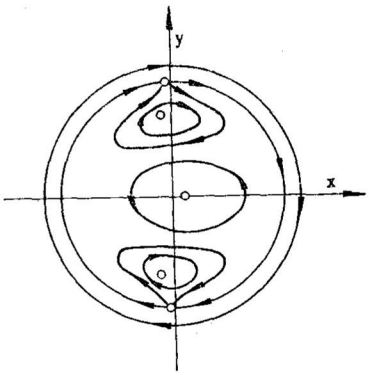

Fig. 18

This is the ellipse $401x^2+y^2=1$ for $x\leqq 0$.

Now we shall consider how the picture of the phase trajectories changes when the parameter $\overline{m}$ varies. There are four values of $\overline{m}$ — $\overline{m}_i (i=1, 2, 3, 4)$ for which the picture changes qualitatively its form ($\overline{m}_1 = -4{,}7$, $\overline{m}_2 = 6{,}25$, $\overline{m}_3 = 12{,}44$, $\overline{m}_4 = 12{,}95$). For $\overline{m}\in(-\infty, \overline{m}_1)$ the picture is a simple one with only one singular point of type A — a center on the negative semi-axis OX, which moves to the left (like the picture in Fig. 2). For $\overline{m}\in(\overline{m}_1, \overline{m}_2)$ there are three singular points — one saddle point on the axis OX and two centers (singular points of type D). Such a picture (for $\overline{m}=0$) is shown in Fig. 16. For $\overline{m}\in(m_2, m_3)$ there are five singular points — three singular points of type A (two saddle points and a center) and the two singular points of type D. Such a picture for $m=10$ is shown in Fig. 17. For $\overline{m}\in(m_3, m_4)$ there are again five singular points — but now only one singular point of type A (a center) and four singular points of type D (two saddle points and two centers). Such

a picture (for $m=12{,}5$) is shown in Fig. 18. For $\overline{m}\in(m_4, \infty)$ the picture of the phase trajectories is again (as for $\overline{m}\in(-\infty, m_1)$) a simple one with only one singular point of type A (a center).

Let us note that the singular points of type D lie on curves which are not phase trajectories (while the singular points of type C lie on internal circles, which are phase trajectories).

5. Concluding remarks

The study of the canonical systems in the phase plane permits a comprehensive idea to be obtained with regard to all possible resonant solutions of the system (1.1).

The canonical systems for r, which is an even number, and for r, which is an odd number, differ essentially.

The canonical systems for a resonance determined by an element which appears more than once in the matrix A differ essentially from those canonical systems for a resonance determined by an element which appears in the matrix A only once.

The results obtained are valid also for some other systems more general than the system (1.1) and also for higher order solution as it is shown in [6]

References

1. Витт, А., Г. Горелик. Колебания упругого маятника как пример двух параметрически связанных линейных систем. Ж. техн. физ., 1933, **3**, 2, 3, 294.
2. Боголюбов, Н. Н., Ю. А. Митропольский. Асимптотические методы в теории нелинейных колебаний. М., Физматгиз, 1974.
3. Sruble, R. A. Nonlinear differential equation, McGraw Hill book Co, New York, 1962.
4. Cheshankov, B. I. An asymptotic method in the field of nonlinear oscillations, Z A M M, 1975, 55, 665-670.
5. Cheshankov, B. I. Resonant oscillations of a conservative two-degrees of freedom system, Mecanique appliquée, Bucarest, 1975, **20**, 1.
6. Cheshankov, B. I. Bi-frequency oscillations in the case of resonance of arbitrary rank, VII Internationale Konferenz über nichtlineare Schwingungen, Berlin, 1977, I, 1.

Received 28. 10. 1983