БЪЛГАРСКА АКАДЕМИЯ НА НАУКИТЕ
ТЕОРЕТИЧНА И ПРИЛОЖНА МЕХАНИКА
София, 1983, год. XIV, № 3

BULGARIAN ACADEMY OF SCIENCES
THEORETICAL AND APPLIED MECHANICS
Sofia, 1983, Year XIV, No 3

Shear Moduli of Orthotropic Two-Phase Media

E. Sobotková, Z. Sobotka

1. Introduction

The paper deals with shear moduli of orthotropic two-phase media, which are determined on the basis of orthogonal three-dimensional models representing the idealized structural configuration. These models represent schematically the unit representative volume and consist of three-dimensional regions bounded by perpendicular planes which are parallel to the principal planes of orthotropy. They represent two different kinds of orthotropy arising either from orthotropic properties of the matrix and of the dispersed phase or caused by the configuration of these phases which can be even isotropic ones.

A typical three-dimensional model for orthotropic two-phase materials, which may be also be called the block diagram, is shown in Fig. 1. The distribution of both the phases is defined by dimensionless characteristic lengths ξ_1, ξ_2, η_1, η_2, ζ_1 and ζ_2.

Let us consider a two-phase material consisting of the orthotropic matrix and of orientated particles of the dispersed phase having the same principal axes of orthotropy as the matrix. The orientated particles may be replaced by prisms, the sides of which are determined by the principal directions of orthotropy. Their volume is given by

$$v_k = \xi_k \eta_k \zeta_k. \tag{1-1}$$

In order to determine the edge length of the equivalent prisms, let us consider the maximum inscribed prisms with edge lengths ξ_{ik}, η_{ik} and ζ_{ik} with edge ratios

$$\alpha_{ik} = \frac{\xi_{ik}}{\eta_{ik}}, \quad \beta_{ik} = \frac{\xi_{ik}}{\zeta_{ik}} \tag{1.2}$$

and the minimum circumscribed prisms with edge ratios

$$\alpha_{ck} = \frac{\xi_{ik}}{\eta_{ck}}, \quad \beta_{ck} = \frac{\xi_{ck}}{\zeta_{ck}}. \tag{1.3}$$

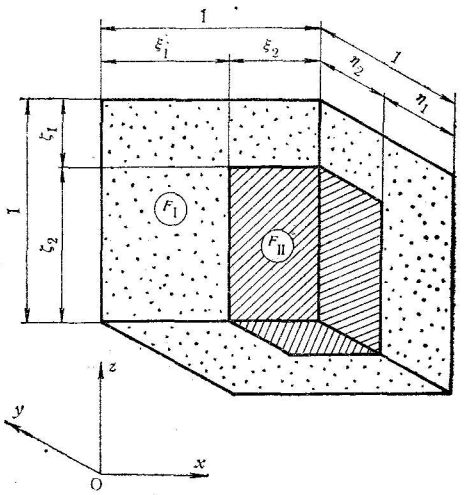


Fig. 1. Three- dimensional model for orthotropic two-phase materials

The edge ratios of equivalent prisms having the volumes V_k equal to those of particles can be approximately found by the linear interpolation as follows

$$\alpha_k=\alpha_{ik}+\frac{v_k-v_{ik}}{v_{ck}-v_{ik}}(\alpha_{ck}-\alpha_{ik}), \tag{1.4}$$

$$\beta_k=\beta_{ik}+\frac{v_k-v_{ik}}{v_{ck}-v_{ik}}(\beta_{ck}-\beta_{ik}), \tag{1.5}$$

where v_{ik} designates the volume of the maximum inscribed prism and v_{ck} that of the minimum circumscribed prism to the k-th orientated particle.

The equivalent prisms are then composed into the resulting prism having the volume

$$v=\sum_{k=1}^{n} v_k, \tag{1.6}$$

which is the sum of the volumes of individual particles of the dispersed phase. The edge lengths of the resulting prism are ξ_2, η_2 and ζ_2. The ratios of edge lengths may be determined for example by the method of moments as follows

$$\alpha=\frac{\sum_{k=1}^{n}\alpha_k v_k}{\sum_{k=1}^{n} v_k}, \qquad \beta=\frac{\sum_{k=1}^{n}\beta_k v_k}{\sum_{k=1}^{n} v_k}. \tag{1.7}$$

Since

$$v=\frac{\xi_2^3}{\alpha\beta}=\frac{\alpha^2\eta_2^3}{\beta}=\frac{\beta^2\zeta_2^3}{\alpha}, \tag{1.8}$$

we obtain

$$\xi_2=\sqrt[3]{\alpha\beta v}, \quad \eta_2=\sqrt[3]{\frac{\beta v}{\alpha^2}}, \quad \zeta_2=\sqrt[3]{\frac{\alpha v}{\beta^2}}. \tag{1.9}$$

The resulting prism of the dispersed phase is in Fig. 1 situated at the corner of the unit representative cube. This is however one possible placement only. The resulting prism can also be located in the center of the cube and in other places without changes of elastic moduli.

2. Physico-Mechanical Shear Moduli of Orthotropic Two-Phase Materials

It will be assumed that the principal directions of orthotropy of the matrix and of particles of the dispersed phase are the same and that the orientation of edges of the equivalent prisms as well as of the resulting prism coincide with those directions. This assumption corresponds to the structural configuration of artificial materials such as concrete where the orthotropy of

the matrix and the orientation of grains of the dispersed phase is caused by the compacting and to that of sedimentary rocks which were formed by gravitational forces.

A horizontal section through the orthotropic matrix of the unit representative cube is deformed by the shear as it is shown in Fig. 2.

The coordinate axes x, y and z coincide with the principal directions of orthotropy and therefore they have a significant physical meaning. Since we are concerned with elastic moduli, we may assume that the orthotropy does not change in course of the elastic deformation.

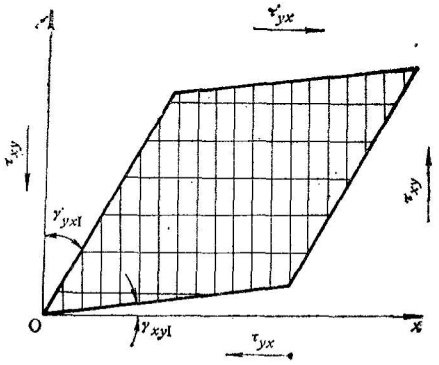


Fig. 2. Horizontal section through the orthotropic matrix deformed by the shear

The shear deformation due to the shear stresses τ_{xy} and τ_{yx} can be regarded as a double slide of two perpendicular systems of ideal layers lying in the directions of the x and y-axes which are marked by the orthotropy.

Because of the orthotropy, the angles γ_{yxI} and γ_{xyI}, corresponding to the shear strains, have different values even if the conjugate shear stresses τ_{yx} and τ_{xy} have the same value. Therefore, we have two different physicomechanical shear moduli G_{yx} and G_{xy} of the orthotropic matrix, which correspond to the different resistance of layered rocks in the direction perpendicular to the layers and in that parallel with them.

The shear strains, related to the principal axes of orthotropy x and y and having therefore, in some measure, an invariant character, are then defined by

$$\gamma_{yxI}=\frac{\tau_{yx}}{G_{yx1}}, \tag{2.1}$$

$$\gamma_{xyI}=\frac{\tau_{xy}}{G_{xy1}}. \tag{2.2}$$

They correspond to the angles formed by deformed bounderies with the axes of orthotropy.

In horizontal sections through both the phases, a more complex shear deformation occurs which is shown in Fig. 3.

The couple of shear stresses τ_{yx} involves the resulting shear strain

$$\gamma_{yxII}=\eta_1\,\gamma_{yx1II}+\eta_2\,\gamma_{yx2II}, \tag{2.3}$$

whereas the shear strain

$$\gamma_{xyII}=\xi_1\,\gamma_{xy1II}+\xi_2\,\gamma_{xy2II} \tag{2.4}$$

is due to the shear stresses τ_{xy} applied in the direction of the y-axis and it is not affected by the shear stresses τ_{yx}.

The shear stress τ_{yx} is distributed into the components τ_{yx1} and τ_{yx2} acting on the individual phases according to the relation

$$\tau_{yx}=\xi_1\,\tau_{yx1}+\xi_2\,\tau_{yx2}. \tag{2.5}$$

Assuming the full cohesion between both the phases, we have the same shear deformation of the dispersed phase and of the adjacent part of the matrix

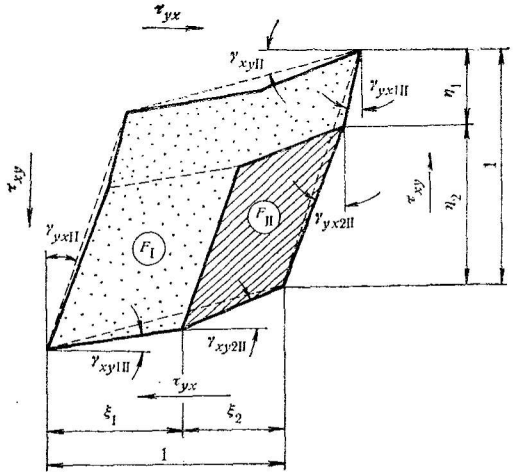


Fig. 3. Non- symmetrical shear of horizontal sections through the matrix and dispersed phase

$$\gamma_{yx2II}=\frac{\tau_{yx1}}{G_{yx1}}=\frac{\tau_{yx2}}{G_{yx2}}, \tag{2.6}$$

from which

$$\tau_{yx2}=\tau_{yx1}=\frac{G_{yx2}}{G_{yx1}}, \tag{2.7}$$

where G_{yx1} is the modulus of the matrix and G_{yx2} is that of the dispersed phase.

Substituting Eq. (2.7) into Eq. (2.5) yields

$$\tau_{yx1}=\frac{\tau_{yx}\,G_{yx1}}{\xi_1 G_{yx1}+\xi_2 G_{yx2}}. \tag{2.8}$$

Introducing this expression into Eq. (2.6), we obtain

$$\gamma_{yx2II}=\frac{\tau_{yx}}{\xi_1 G_{yx1}+\xi_2 G_{yx2}}. \tag{2.9}$$

The shear strain γ_{yx1II} is defined by

$$\gamma_{yx1II}=\frac{\tau_{yx}}{G_{yx1}}. \tag{2.10}$$

Substituting Eqs. (2.9) and (2.10) into Eq. (2.3), we get

$$\gamma_{yxII}=\tau_{yx}\left(\frac{\eta_1}{G_{yx1}}+\frac{\eta_2}{\xi_1 G_{yx1}+\xi_2 G_{yx2}}\right). \tag{2.11}$$

The average resulting shear strain γ_{yx} can be found on the basis of the values (2.1) and (2.11) as follows

$$\gamma_{yx}=\zeta_1\gamma_{yxI}+\zeta_2\gamma_{yxII} \tag{2.12}$$

as follows

$$\gamma_{yx}=\tau_{yx}\left[\frac{\zeta_1}{G_{yx1}}+\zeta_2\left(\frac{\eta_1}{G_{yx1}}+\frac{\eta_2}{\xi_1 G_{yx1}+\xi_3 G_{yx2}}\right)\right], \tag{2.13}$$

from which we obtain the corresponding physicomechanical shear modulus

$$G_{yx}\equiv\frac{\tau_{yx}}{\gamma_{yx}}=\frac{1}{\frac{\zeta_1}{G_{yx1}}+\zeta_2\left(\frac{\eta_1}{G_{yx1}}+\frac{\eta_2}{\xi_1 G_{yx1}+\xi_2 G_{yx2}}\right)}. \tag{2.14}$$

By analogy with Eq. (2.5), we can write the relation for the distribution of the shear stress τ_{xy} into the components τ_{xy1} and τ_{xy2} in the direction of the y-axis as follows

$$\tau_{xy}=\eta_1\,\tau_{xy1}+\eta_2\,\tau_{xy2}. \tag{2.15}$$

The cohesion between both the phases yields the equality of the shear strains of the dispersed phase and the adjacent part of the matrix:

$$\gamma_{xy2}=\frac{\tau_{xy1}}{G_{xy1}}=\frac{\tau_{xy2}}{G_{xy2}}, \tag{2.16}$$

from which we get

$$\tau_{xy2}=\tau_{xy1}\frac{G_{xy2}}{G_{xy1}}. \tag{2.17}$$

Substituting Eq. (2.17) into Eq. (2.15), we obtain

$$\tau_{xy1}=\frac{\tau_{xy}\,G_{xy1}}{\eta_1 G_{xy1}+\eta_2 G_{xy2}}. \tag{2.18}$$

Introducing the preceding expression into Eq. (2.16) yields

$$\gamma_{xyII}=\frac{\tau_{xy}}{\eta_1 G_{xy1}+\eta_2 G_{xy2}}. \tag{2.19}$$

The other partial shear strain is given by

$$\gamma_{xyIII}=\frac{\tau_{xy}}{G_{xy1}}. \tag{2.20}$$

Substituting Eqs. (2.19) and (2.20) into Eq. (2.4), we obtain

$$\gamma_{xyII}=\tau_{xy}\left(\frac{\xi_1}{G_{xy1}}+\frac{\xi_2}{\eta_1 G_{xy}+\eta_2 G_{xy2}}\right). \tag{2.21}$$

By analogy with Eqs. (2.12) and (2.13), we get the average resulting shear strain

$$\gamma_{xy}=\tau_{xy}\left[\frac{\zeta_1}{G_{xy1}}+\zeta_2\left(\frac{\xi_1}{G_{xy1}}+\frac{\xi_2}{\eta_1 G_{xy1}+\eta_2 G_{xy2}}\right)\right], \tag{2.22}$$

from which we obtain the physico-mechanical shear modulus

$$G_{xy}\equiv\frac{\tau_{xy}}{\gamma_{xy}}=\frac{1}{\frac{\zeta_1}{G_{xy1}}+\zeta_2\left(\frac{\xi_1}{G_{xy1}}+\frac{\xi_2}{\eta_1 G_{xy1}+\eta_2 G_{xy2}}\right)}. \tag{2.23}$$

Proceeding in an analogous manner as before, we may find physico-mechanical shear moduli for the deformation in the vertical plane xz:

$$G_{zx}=\frac{1}{\frac{\eta_1}{G_{zx1}}+\eta_2\left(\frac{\zeta_2}{G_{zx1}}+\frac{\zeta_2}{\xi_1 G_{zx1}+\xi_2 G_{zx2}}\right)}, \tag{2.24}$$

$$G_{xz}=\frac{1}{\frac{\eta_1}{G_{xz1}}+\eta_2\left(\frac{\xi_1}{G_{xz1}}+\frac{\xi_2}{\zeta_1 G_{xz1}+\zeta_2 G_{xz2}}\right)} \tag{2.25}$$

and those for the deformation in the plane yz:

$$G_{zy}=\frac{1}{\frac{\xi_1}{G_{zy1}}+\xi_2\left(\frac{\zeta_1}{G_{zy1}}+\frac{\zeta_2}{\eta_1 G_{zy1}+\eta_2 G_{zy2}}\right)}, \tag{2.26}$$

$$G_{yz}=\frac{1}{\frac{\xi_1}{G_{yz1}}+\xi_2\left(\frac{\eta_1}{G_{yz1}}+\frac{\eta_2}{\zeta_1 G_{yz1}+\zeta_2 G_{yz2}}\right)}. \tag{2.27}$$

Assuming the equalibility of the conjugate shear stresses $\tau_{xy}=\tau_{yx}$, $\tau_{xz}=\tau_{zx}$, $\tau_{yz}=\tau_{zy}$, we relate in such a way the symmetrical stress tensor to the non-symmetrical strain tensor. The assumption of the equality of conjugate shear stresses yields the zero value of the resulting couple stresses. However, the partial regions of the section shown in Fig. 3, namely B, C and D are acted on by the couple stresses $\tau_{xy2}\,\xi_2\,\eta_2-\tau_{yx2}\,\xi_2\,\eta_2$, $\tau_{xy}\,\xi_1\,\eta_2-\tau_{yx1}\,\xi_1\,\eta_2$ and $\tau_{xy1}\,\xi_2\,\eta_1-\tau_{xy1}\,\xi_2\,\eta_1$. We may write for such a section the following condition of the moment equilibrium

$$\begin{aligned}(\tau_{xy}-\tau_{yx})\,\xi_1\,\eta_1+(\tau_{xy2}-\tau_{yx2})\,\xi_2\,\eta_2+(\tau_{xy}-\tau_{yx1})\,\xi_1\,\eta_2\\ +(\tau_{xy1}-\tau_{yx})\,\xi_2\,\eta_1=\tau_{xy}-\tau_{yx}.\end{aligned} \tag{2.28}$$

Bearing in mind the relations

$$\tau_{xy2}=\frac{\tau_{xy}-\eta_1\tau_{xy1}}{\eta_2}, \tag{2.29}$$

$$\tau_{yx2}=\frac{\tau_{yx}-\xi_1\tau_{yx1}}{\xi_2}, \tag{2.30}$$

which follow from Eqs. (2.5) and (2.15), we obtain from Eq. (2.28) the identity.

3. Ideal shear moduli for average symmetric shear strains

The horizontal section through two phases is characterized by four different deformational regions as it is shown in Fig. 4.

In order to obtain the relations between components of the symmetrical stress tensor and the symmetrical strain tensor, we may introduce the relation between average shear strains and shear stresses proceeding in an analogous way as P. P. Teodorescu [1] in the case of isotropic Cosserat media. The average shear strains of the regions A, B, C and D are then expressed by

$$\varepsilon_{xyA}\equiv\frac{1}{2}(\gamma_{xy1}+\gamma_{yx1})=\frac{1}{2G_{z1}}(\tau_{xy}+\tau_{yx}), \tag{3.1}$$

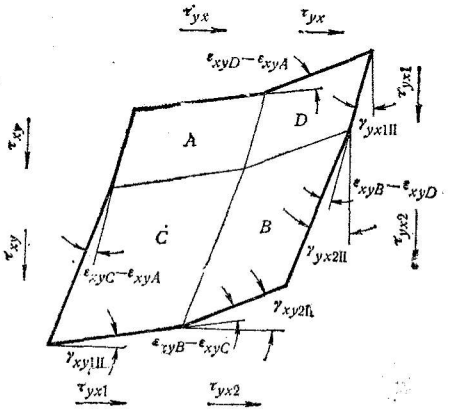


Fig. 4. Four regions of the horizontal section through two phases

$$\varepsilon_{xyB} \equiv \frac{1}{2}(\gamma_{xy2}+\gamma_{yx2}) = \frac{1}{2G_{z2}}(\tau_{xy2}+\tau_{yx2}), \tag{3.2}$$

$$\varepsilon_{xyC} \equiv \frac{1}{2}(\gamma_{xy1}+\gamma_{yx2}) = \frac{1}{2G_{z1}}(\tau_{xy}+\tau_{yx1}), \tag{3.3}$$

$$\varepsilon_{xyD} \equiv \frac{1}{2}(\gamma_{xy2}+\gamma_{yx1}) = \frac{1}{2G_{z1}}(\tau_{xy1}+\tau_{yx}), \tag{3.4}$$

where

$$G_{z1} = \frac{2}{\frac{1}{G_{xy1}}+\frac{1}{G_{yx1}}} \tag{3.5}$$

and

$$G_{z2} = \frac{2}{\frac{1}{G_{xy2}}+\frac{1}{G_{yx2}}} \tag{3.6}$$

are ideal shear moduli for average shear strains and stresses which have the same value in all directions in the plane xy perpendicular to the z-axis.

Eqs. (3.1) to (3.4) yield the following important relation between average shear strains

$$\varepsilon_{xyA}+\varepsilon_{xyB} = \varepsilon_{xyC}+\varepsilon_{xyD}. \tag{3.7}$$

From the set of Eqs. (3.1) to (3.4), we further obtain the following relation between the components of shear stresses

$$\frac{1}{2G_{z1}}(\tau_{xy1}+\tau_{yx1}) = \frac{1}{2G_{z2}}(\tau_{xy2}+\tau_{yx2}). \tag{3.8}$$

Substituting in this relation Eqs. (2.29) and (2.30) yields

$$\left(\frac{G_{z2}}{G_{z1}}+\frac{\eta_1}{\eta_2}\right)\tau_{xy1}+\left(\frac{G_{z2}}{G_{z1}}+\frac{\xi_1}{\xi_2}\right)\tau_{yx1} = \frac{\tau_{xy}}{\eta_2}+\frac{\tau_{yx}}{\xi_2}. \tag{3.9}$$

The resulting average shear strain of the square section through two phases may be expressed in the following four alternative forms

$$\varepsilon_{xyII} = \varepsilon_{xyA}+(\varepsilon_{xyD}-\varepsilon_{xyA})\,\xi_2+(\varepsilon_{xyC}-\varepsilon_{xyA})\,\eta_2 \tag{3.10}$$

$$= \varepsilon_{xyA}(\xi_1 - \eta_2) + \varepsilon_{xyD}\,\xi_2 + \varepsilon_{xyC}\,\eta_2,$$

(3.11) $$\varepsilon_{xyII} = \varepsilon_{xyB} - (\varepsilon_{xyB} - \varepsilon_{xyC})\,\xi_1 - (\varepsilon_{xyB} - \varepsilon_{xyD})\,\eta_1$$

$$= \varepsilon_{xyB}(\xi_2 - \eta_1) + \varepsilon_{xvC}\,\xi_1 + \varepsilon_{xyD}\,\eta_1,$$

(3.12) $$\varepsilon_{xyII} = \varepsilon_{xyC} + (\varepsilon_{xyB} - \varepsilon_{xyC})\,\xi_2 - (\varepsilon_{xvC} - \varepsilon_{xyA})\,\eta_1$$

$$= \varepsilon_{xyC}(\xi_1 - \eta_1) + \varepsilon_{xyB}\,\xi_2 + \varepsilon_{xyA}\eta_1,$$

(3.13) $$\varepsilon_{xyII} = \varepsilon_{xyD} - (\varepsilon_{xyD} - \varepsilon_{xyA})\,\xi_1 + (\varepsilon_{xy}B - \varepsilon_{xyD})\,\eta_2$$

$$= \varepsilon_{xyD}(\xi_2 - \eta_2) + \varepsilon_{xyA}\,\xi_1 + \varepsilon_{xyB}\,\eta_2.$$

Expressing the shear strains in terms of shear stresses according to Eqs. (3.1) to (3.4) and substituting for τ_{xy2} and τ_{yx2} the values from Eqs. (2.29) and (2.30), we obtain the common unique expression

(3.14) $$\varepsilon_{xyII} = \frac{4}{2G_{z1}}(\xi_1\,\tau_{xy} + \eta_1\,\tau_{yx} + \xi_2\,\tau_{xy1} + \eta_2\,\tau_{yx1}).$$

For determining the strain ε_{xyII}, the stress components τ_{xy1} and τ_{yx1} are needed. Eq. (3.9) is not sufficient for this purpose. Therefore, a further relation should be sought.

Fqs. (3.5) and (3.6) may be rewritten as follows

(3.15) $$G_{z1} = \frac{2\alpha_1 G_{yx1}}{\alpha_1 + 1},$$

(3.16) $$G_{z2} = \frac{2\alpha_2 G_{yx2}}{\alpha_2 + 1},$$

where

(3.17) $$\alpha_1 = \frac{G_{xy1}}{G_{yx1}}, \quad \alpha_2 = \frac{G_{xy2}}{G_{yx2}}.$$

The similar character of orthotropy of both the phases is defined by the equality $\alpha_1 = \alpha_2$. In this case, the relations (2.6) and (2.16) yield

(3.18) $$\frac{\tau_{xy1}}{G_{z1}} = \frac{\tau_{xy2}}{G_{z2}},$$

(3.19) $$\frac{\tau_{yx1}}{G_{z1}} = \frac{\tau_{yx2}}{G_{z2}}.$$

Combining Eqs. (3.18) and (3.19) with the relations (2.29) and (2.30), we obtain

(3.20) $$\tau_{xy1} = \frac{\tau_{xy}}{\eta_1 + \eta_2 \dfrac{G_{z2}}{G_{z1}}},$$

(3.21) $$\tau_{yx1} = \frac{\tau_{yx}}{\xi_1 + \xi_2 \dfrac{G_{z2}}{G_{z1}}}.$$

The previous expressions satisfy the relation (3.9).

Introducing Eqs. (3.20) and (3.21) into Eq. (3.14) yields

(3.22) $$\varepsilon_{xyII} = \frac{1}{2}\left[\frac{1}{G_{z1}}(\xi_1\,\tau_{xy} + \eta_1\,\tau_{yx}) + \frac{\xi_2\,\tau_{xy}}{\eta_1 G_{z1} + \eta_2 G_{z2}} + \frac{\eta_2\,\tau_{yx}}{\xi_1 G_{z1} + \xi_2 G_{z2}}\right],$$

Combining this relation with the expression for the shear strain of the section through the matrix

$$\varepsilon_{xyI}=\frac{\tau_{xy}+\tau_{yx}}{2G_{z1}} \tag{3.23}$$

and assuming the equality of the conjugate resulting shear stresses $\tau_{xy}=\tau_{yx}$, we obtain the average shear strain of the unit representative volume in horizontal planes

$$\varepsilon_{xy}=\tau_{xy}\left[\frac{\xi_1}{G_{z1}}+\frac{\xi_2}{2}\left(\frac{\xi_1+\eta_1}{G_{z1}}+\frac{\xi_2}{\eta_1 G_{z1}+\eta_2 G_{z2}}+\frac{\eta_2}{\xi_1 G_{z1}+\xi_2 G_{z2}}\right)\right]. \tag{3.24}$$

The resulting shear modulus of a two-phase material in horizontal planes is then given by

$$G_z\equiv\frac{\tau_{xy}}{\varepsilon_{xy}}=\frac{1}{\frac{\xi_1}{G_{z1}}+\frac{\xi_2}{2}\left(\frac{\xi_1+\eta_1}{G_{z1}}+\frac{\xi_2}{\eta_1 G_{z1}+\eta_2 G_{z2}}+\frac{\eta_2}{\xi_1 G_{z1}+\xi_2 G_{z2}}\right)}. \tag{3.25}$$

This ideal shear modulus can be related, under some restrictive conditions, to the physico-mechanical moduli G_{xy} and G_{yx} by the expression

$$G_z=\frac{2}{\frac{1}{G_{xy}}+\frac{1}{G_{yx}}}, \tag{3.26}$$

which is analogous to Eqs. (3.5) and (3.6). Introducing Eqs. (2.23) and (2.24) into Eq. (3.26), we have

$$G_z=\frac{1}{\zeta_1\left(\frac{1}{G_{xy1}}+\frac{1}{G_{yx1}}\right)+\frac{\zeta_2}{2}\left(\frac{\xi_1}{G_{xy1}}+\frac{\eta_1}{G_{yx1}}+\frac{\xi_2}{\eta_1 G_{xy1}+\eta_2 G_{xy2}}+\frac{\eta_2}{\xi_1 G_{yx1}+\xi_2 H_{yx2}}\right)}. \tag{3.27}$$

Bearing in mind Eq. (3.5), we may see that the first term in the denominator of Eq. (3.27) is equal to that in Eq. (3.25) without any restriction. However, the second terms in the denominators of Eqs. (3.25) and (3.27) are only equal, if $G_{xy1}=G_{yx1}$ and $G_{xy2}=G_{xy2}$. These equalities yield according to Fqs. (3.5) and (3.6) further $G_{xy1}=G_{yx1}=G_{z1}$ and $G_{xy2}=G_{yx2}=G_{z2}$.

Proceeding in an analogous way as before, we get by analogy with Eq. (3.25), the ideal shear moduli in vertical planes of orthotropy:

$$G_y=\frac{1}{\frac{\eta_1}{G_{y1}}+\frac{\eta_2}{2}\left(\frac{\xi_1+\zeta_1}{G_{y1}}+\frac{\xi_2}{\zeta_1 G_{y1}+\zeta_2 G_{y2}}+\frac{\zeta_2}{\xi_1 G_{y1}+\xi_2 G_{y2}}\right)}, \tag{3.28}$$

$$G_x=\frac{1}{\frac{\xi_1}{G_{x1}}+\frac{\xi_2}{2}\left(\frac{\eta_1+\zeta_1}{G_{x1}}+\frac{\eta_2}{\zeta_1 G_{x1}+\zeta_2 G_{x2}}+\frac{\zeta_2}{\eta_1 G_{x1}+\eta_2 G_{x2}}\right)}, \tag{3.29}$$

$$G_{y1}=\frac{2}{\frac{1}{G_{xz1}}+\frac{1}{G_{zx1}}},\quad G_{y2}=\frac{2}{\frac{1}{G_{xz2}}+\frac{2}{G_{zx2}}}, \tag{3.30}$$

$$G_{x1}=\frac{2}{\frac{1}{G_{yz1}}+\frac{1}{G_{zy1}}},\quad G_{x2}=\frac{2}{\frac{1}{G_{yz2}}+\frac{1}{G_{z_2}}}. \tag{3.31}$$

If $G_{xz1}=G_{zx1}$, $G_{xz2}=G_{zx2}$, we have the relation

$$G_y=\frac{2}{\frac{1}{G_{xz}}+\frac{1}{G_{zx}}} \tag{3.32}$$

between the moduli defined by Eqs. (2.24), (2.25) and (3.28).

The equalities $G_{yz1}=G_{zy1}$ and $G_{yz2}=G_{zy2}$ yield the relation

$$G_x=\frac{2}{\frac{1}{G_{yz}}+\frac{1}{G_{zy}}}\cdot \tag{3.33}$$

between the resulting shear moduli given by Eqs. (2.26), (2.27) and (3.29).

4. Conclusion

For determining the elastic moduli of orthotropic two-phase media, the three-dimensional models or block diagrams have been introduced which are, in some measure, analogous to three-dimensional rheological models [2]. These models can be regarded either from the phenomenological or from the structural points of view. From the phenomenological point of view, there are some analogies with rheological models, not only with three-dimensional [3], [4] and even with usual one-dimensional models. From the point of view of the body structure, three-dimensional models of two-phase materials can be obtained by various procedures consisting in replacing individual orientated particles by elementar prisms and in seeking the resulting prisms as it has been shown in Section 1.

For the idealized distribution of stresses on individual regions, analogous assumptions has been adopted as in the case of rheological models.

Section 2 deals with physico-mechanical shear moduli of orthotropic media corresponding to the deformation in principal planes of orthotropy. The deformation is defined by angles formed by displaced edges of perpendicular cross sections of the unit representative volume with the axes of orthotropy. These angles have therefore, in a certain measure, an invariant character. The phisico-mechanical shear moduli relate the symmetrical shear stresses to the non-symmetrical shear deformation corresponding to the idealized structural configuration which is non-symmetric with respect to the diagonal of the unit representative cube.

Section 3 contains formulae for ideal standard shear moduli relating together symmetric average shear stresses and strains.

For deriving the relations for physico-mechanical shear moduli and ideal standard moduli, the same assumptions have been adopted which are usual in the theory of rheological models [3], [4]. Therefore, we have assumed the uniform distribution of stresses in the individual regions and their jumplike changes on the boundaries of these regions. Such a procedure instead of that which is based on the exact theory of the three-dimensional non-symmetric elasticity is justified not only by the simplicity but also by the introduction of an idealized body structure which represents an average structural configuration of a great number of specimens.

Analogous approximate semi-structural procedures may be applied for determining shear characteristics of various non-homogeneous elastoplastic, viscoelastic, viscoplastic and elastoviscoplastic bodies which are treated in books by

G. Brankov [5] and D. Kolarov, A. Baltov and N. Bontcheva [6]. Structural models have been applied for determining rheological integral operators by E. Sobotková [7].

Received 21. 09. 1982

References

1. Teodorescu, P. P., Dynamics of Linear Elastic Bodies (in Roumanian). Editura Academiei Republicii Socialiste Romania, Bucureşti 1972.
2. Sobotka, Z., Two-Dimensional and Three-Dimensional Rheological Models for Orthotropic with Non-Symmetrical Shear Effects. Structure, Solid Mechanics and Engineering Design. The Proceedings of the Southampton 1969 Civil Engineering Materials Conference. Part 1,p. 509-519, Edited by M. Teéni, Wiley-Interscience, London, New York, Sydney, Toronto 1971.
3. Sobotka, Z., Two-Dimensional and Three-Dimensional Rheological Models. Proceedings of the Fifth International Congress on Rheology, Vol. 1, p. 185-200. University of Tokyo Press, Tokyo-University Park Press, Baltimore and Manchester 1969.
4. Sobotka, Z., Various Kinds of Two-Dimensional Rheological Models, Journal of Macromolecular Science-Physics B5 (2), p. 393-414, June 1971.
5. Brankov, G., Fundamental Problems of the Theory of Viscoelasticity (in Bulgarian). Publishing House of the Bulgarian Academy of Sciences, Sofia 1973.
6. Kolarov, D., A. Baltov, N. Bontcheva, Mechanics of Plastic Media (in Bulgarian). Publishing House of Bulgarian Academy of Sciences, Sofia 1975.
7. Sobotková, E., Rheological Integral Operators of Two-Phase Orthotropic Viscoelastic Bodies. Bulgarian academy of sciences. Second national congress on theoretical and applied mechanics. Varna 1973. Vol. 1, 1975, p. 102-110.