Journal of Theoretical
and Applied Mechanics
Sofia 1993, Year XXIV No 2

ON VALIDITY OF THEORETICAL MODELS FOR DETERMINATION OF STRESS IN COATINGS

CHR. KOUYUMDJIEV, N. STANCHEVA

1. Introduction

A basic mechanical method for determining the macrostress in electrodeposits is the bending strip method [1]. An elastic deposit **1** is plated on one side of a long and narrow elastic strip **0** (Fig. 1), which is insulated on the other side. Thus, the test sample obtained, bends itself. By measuring the displacement δ of its free end, the stress in the deposit can be calculated. The nomenclature is as follows: $\mathbf{E}$ and $\mathbf{E_0}$ are Young's moduli and μ and μ_0 are Poisson's ratios for the deposit and the cathode respectively.

Different theoretical models of the test sample in Fig. 1 exist, on basis of which some relations have been derived for investigating the stress-strain state of the deposit with various degree of accuracy, and taking into consideration the deposit elastic and rheologic properties. The aim of the present work is to check three such models [2, 3, 4] through solving the corresponding problems of the theory of elasticity by means of the finite element method [5].

2. Formulation of the problems

The problem of determining the average residual stress in the cross-section of the deposit **1** (Fig. 1) has been reduced in work [2] to the following problem of the theory of thin elastic plates.

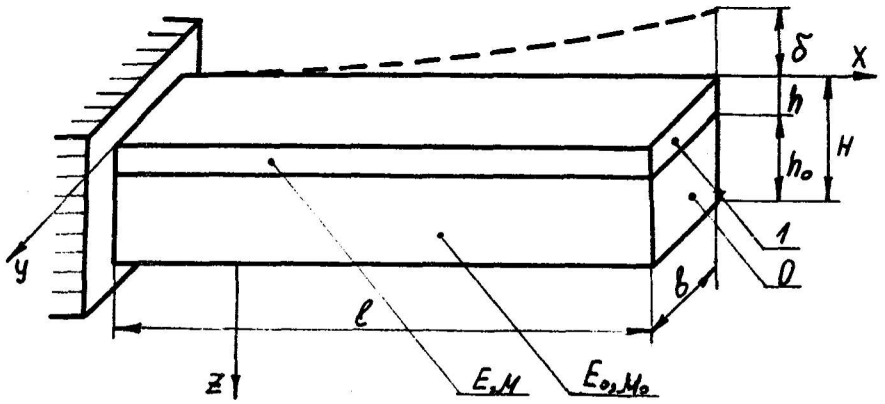

Fig. 1. Test sample for stress determination (1-deposit, 0-cathode, δ-measured displacement).

Problem A

Let us have a composite rectangular thin elastic plate (Fig. 2) composed by welding together of two plates of different materials. The lower plate (modelling the cathode) has thickness $\mathbf{h_0 = t_0}$ and mechanical characteristics $\mathbf{E_0}, \mu_0$, and the upper plate (modelling the deposit) has thickness $\mathbf{h = t_1 + t_2}$, and mechanical characteristics $\mathbf{E}, \mu$. The surrounding faces of the composite plate are not loaded. There are no thermal changes as well. The dead weight is being neglected. The composite plate is being bent as a result of the initial strains:

$$\bar{\varepsilon}_x = \bar{\varepsilon}_y = \bar{\varepsilon} \neq 0, \quad \bar{\varepsilon}_z \neq 0, \quad \bar{\gamma}_{xy} = \bar{\gamma}_{yz} = \bar{\gamma}_{zx} = 0, \tag{1}$$

emerging at all points of the upper plate. On the basis of the measured displacement δ (Fig. 1) the state of stress is to be determined in the composite plate far from its boundary zone with an approximate width $\mathbf{H}$, and initial strain $\bar{\varepsilon}$ as well.

Problem B

Much more detailed information about the state of stress in deposit **1** (Fig. 1) can be obtained if the deposit is regarded as being formed by the consecutive deposition of a finite number of layers, and the initial stress [3] when the residual stress [6] in each layer is determined. With this end in view, the following auxiliary problem has been formulated and solved in [3].

A composite thin elastic plate (Fig. 2) was considered, made by welding together of three plates. The lower plate (modelling the cathode) has thickness $\mathbf{h_0 = t_0}$, the

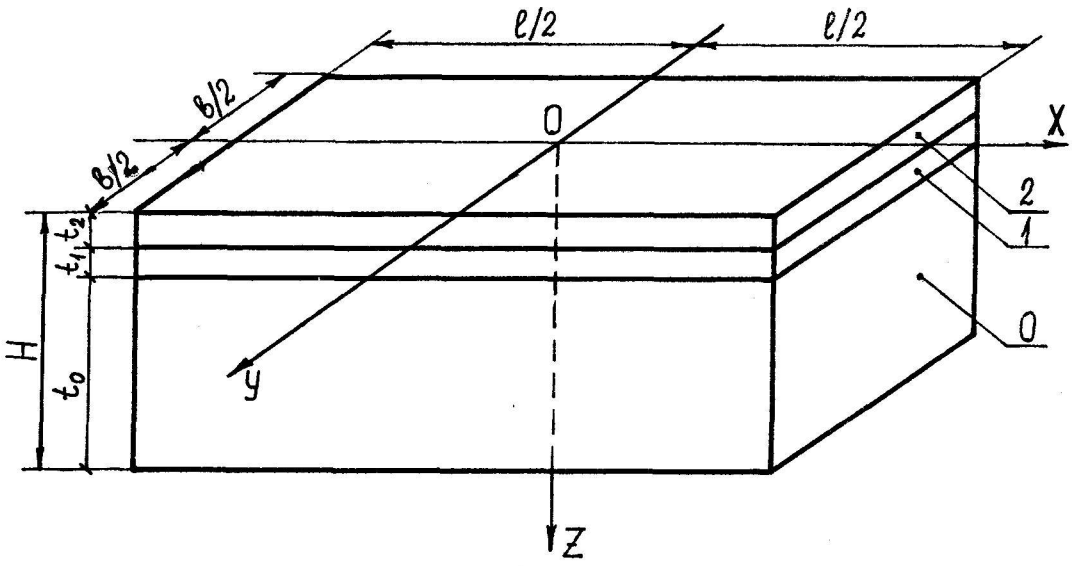

Fig. 2. A composite thin elastic plate - a model of the test sample from Fig. 1.

intermediate plate (modelling a preliminaryly deposited layer of unstressed deposit) has thickness $\mathbf{t_1}$, and the upper plate (modelling a superimposed layer of stressed deposit) has thickness $\mathbf{t_2}$. The mechanical characteristics of the lower plate are $\mathbf{E_0}, \mu_0$ and of intermediate and upper plates – $\mathbf{E}, \mu$. At assumptions similar to those in problem **A**, the task is to express by means of the measured displacement δ the state of stress in the composite plate far from its boundary zone, resulting from the initial strains (1) emerging at all points of the upper plate **2**.

Problem C

With a view to investigate the rheologic processes which occur in some electrodeposits, the following auxiliary problem of the theory of thin elastic plates has been formulated and solved in the work [4].

Let us consider a composite thin elastic plate of rectangular shape (Fig. 2) made by welding together of three plates. Plate **0** is a model of the cathode (with mechanical characteristics $\mathbf{E_0}, \mu_0$), and plates **1, 2** are two layers of the deposit (with mechanical characteristics $\mathbf{E}, \mu$). At the same assumptions, as in problem **A**, the task is to determine the state of stress in the composite plate far from its boundary zone, due to initial strains (1) emerging at all points of plate **1** (problem **C**).

The corresponding solutions of these three problems are given in works [2, 3, 4] at simplifying assumptions, typical for the linear theory of thin elastic plates. Naturally,

the idea arises to check these solutions by means of more precise theoretical models built at less simplifying assumptions. This is done in the present work through solving the following three three-dimensional problems of the linear theory of elasticity.

A composite elastic right parallelepiped with dimensions and mechanical characteristics of its separate parts given in Fig. 2 is investigated. It is freed from the assumptions for thin elastic plates. It is only assumed, that its material is of continuous, homogeneous in its separate parts, isotropic and linearly elastic medium, and its displacements $u(x,y,z)$, $v(x,y,z)$ and $w(x,y,z)$ are continuous functions of the coordinates, including the boundaries between two adjacent parts. Its dead weight is neglected. There are no thermal changes and no load on the surrounding faces of the parallelepiped, and its fixing to the coordinate system is defined by the equalities:

$$\text{at } \mathbf{x = y = z = 0}, \quad \mathbf{u = v = w = 0}, \tag{2}$$

$$\frac{\partial \mathbf{u}}{\partial \mathbf{y}} - \frac{\partial \mathbf{v}}{\partial \mathbf{x}} = \frac{\partial \mathbf{v}}{\partial \mathbf{z}} - \frac{\partial \mathbf{w}}{\partial \mathbf{y}} = \frac{\partial \mathbf{w}}{\partial \mathbf{x}} - \frac{\partial \mathbf{u}}{\partial \mathbf{z}} = \mathbf{0}.$$

The stress – strain state is to be determined in the composite parallelepiped at three different cases – appearance of initial strains (1) equal at all points of:

a) parallelepipeds 1, and 2;

b) parallelepiped 2;

c) parallelepiped 1.

3. Solutions of the Problems and Discussion of the Results

The three formulated three-dimensional problems of the linear theory of elasticity were solved here by the use of the Finite Element Method (FEM). The automated software system VIMKE developed at the "Angel Kanchev" Technical University, Rousse [5] was applied. Because of the symmetry of the object and of the given initial strains toward the planes **xz** and **yz** (Fig. 2), only a quarter of the object was investigated (Fig. 3). The problems were solved at the following numerical data: $l = 1.6$ mm, $b = 0.8$ mm, $E_0 = 1.7.10^{11}$ Pa, $\mu_0 = 0.44$, $E = 0.922.10^{11}$ Pa, $\mu = 0.27$, $\bar{\varepsilon} = 5.10^{-4}$. The thicknesses of the investigated parts were: $t_0 = 0.10$ mm, $t_1 = t_2 = 0.02$ mm.

In the cross-section of symmetry $x = 0$, three boundary conditions were satisfied: displacement along **x** axis $u = 0$, and shear stresses $\tau_{xy} = \tau_{xz} = 0$, and by analogy in section $y = 0$: $v = 0$, $\tau_{yx} = \tau_{yz} = 0$. The discretization of the investigated part (Fig. 3) consists of 224 three-dimensional finite elements of the TH3P type [5]. Each element has the form of right parallelepiped and has 20 nodes. The total number of nodes for the investigated part was 1283. The displacements and the components of the state of stress were calculated for each node. It was established that excluding the narrow

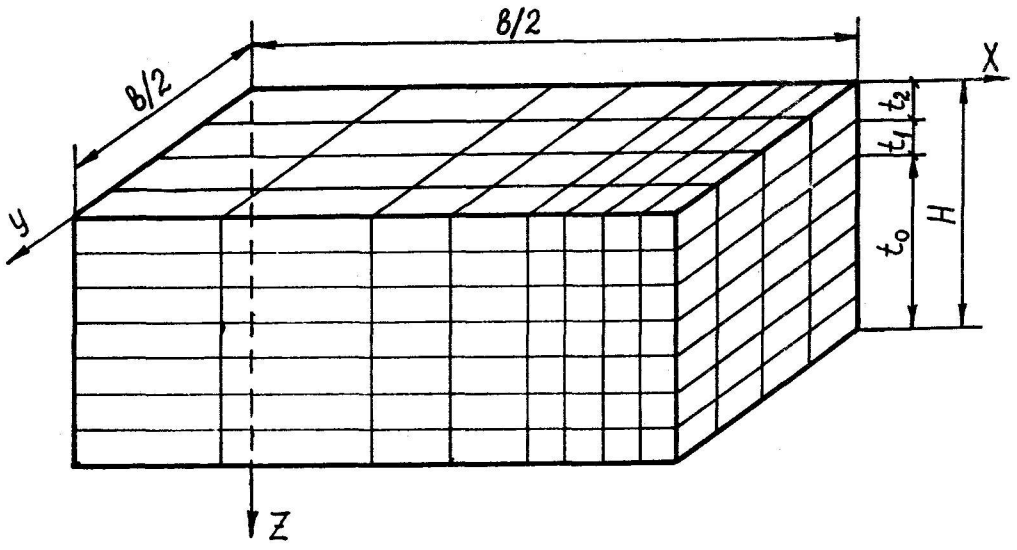

Fig. 3. Discretization of the investigated quarter of the right parallelepiped from Fig. 2.

boundary zone $l/2 - H \leq x \leq l/2, b/2 - H \leq y \leq b/2$ the state of stress in the rest of the body may be considered as two-dimensional with components:

$$\sigma_x = \sigma_y = \sigma \neq 0, \quad \sigma_z = 0, \quad \tau_{xy} = \tau_{yz} = \tau_{zx} = 0, \tag{3}$$

which are independent of coordinates **x** and **y**. The normal stress diagrams for an arbitrary cross-section parallel to the **z** axis and located far from the boundary zone are shown in Fig.4. They coincide with the corresponding diagrams, obtained with the comparatively simple relations in works [2, 3, 4]. Besides, it is at least the first three significant digits that coincide in the corresponding stress values, obtained by the two models.

Fig. 5 shows the diagrams of stresses of interaction of the two parts of the composite parallelepiped in problem A along the line y = 0, $z = t_1 + t_2$. The interaction of these parts is accomplished mainly in a boundary strip with a width, which is approximately equal to the plate thickness **H**. In the rest of the area of interaction $|x| < l/2 - H, |y| < b/2 - H$ the stresses are negligible. The systems of elementary forces $\tau_{zx}dxdy, \tau_{zy}dxdy$ and $\sigma_z dxdy$ in the boundary strip are reduced to forces and moments respectively, of intensity **p** and **M**, and distributed along the common edges of the upper and lower plate which fully confirms the theoretical model of the work [2]. In the same way the methods and results of the works [3, 4] are confirmed.

In conclusion it may be stated that the solved three-dimensional problems fully confirm the simpler theoretical models and the results obtained through them [2, 3, 4].

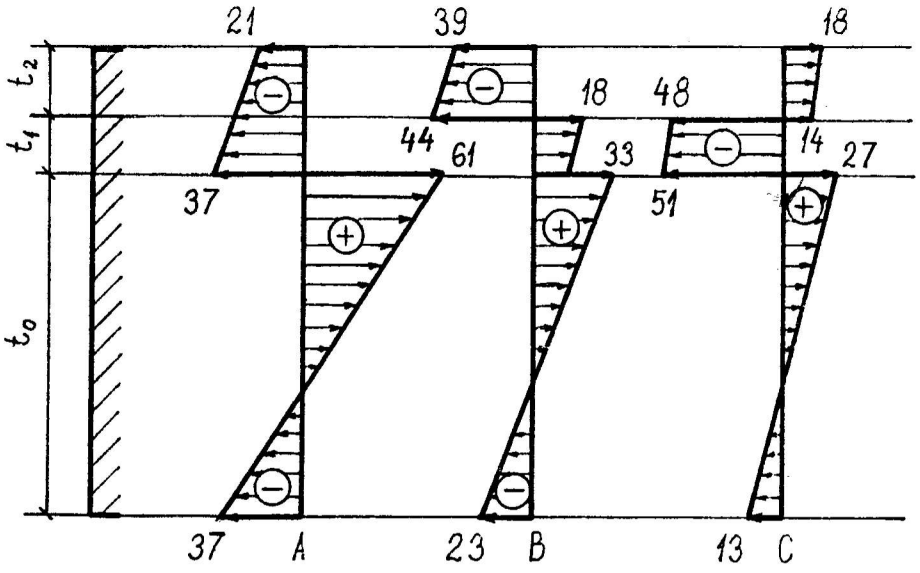

Fig. 4. Diagrams of normal stress σ in MPa for problems A, B and C in a cross-section parallel to z axis and located far from the boundary zone.

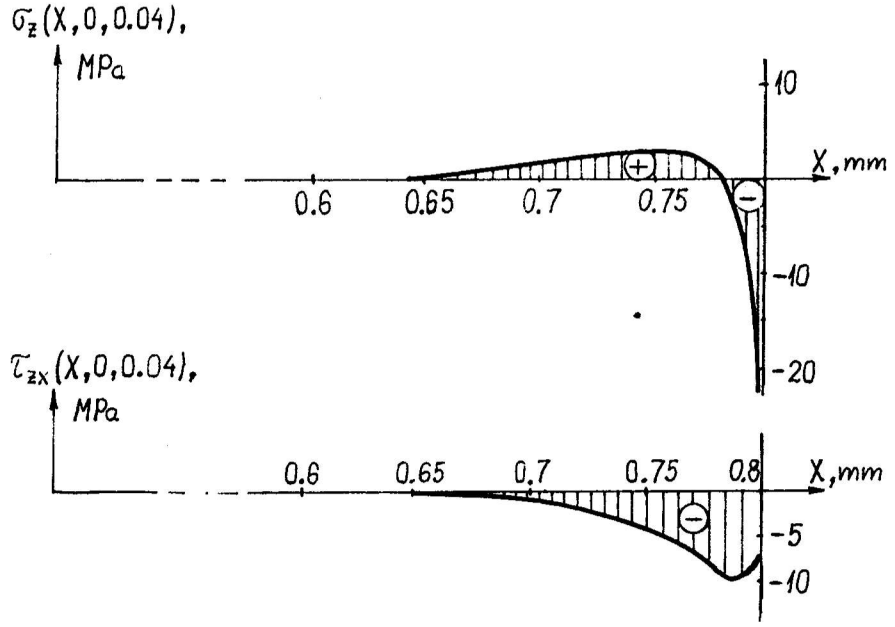

Fig. 5. Diagrams of the stresses with which the two parts of the composite parallelepiped interact in problem A along the line $y = 0, z = t_1 + t_2 = 0.04$ mm.

This substantiates the application in laboratory practice of the obtained relations and algorythms for determining the average [2], the initial [3], and the residual stresses [6] in elastic deposits, as well as for investigating the rheologic processes, observed in some deposits [4].

REFERENCES

[1] STONEY, G. G. The Tension of Metallic Films Deposited by Electrolysis. *Proc. R. Soc. London*, Ser. A, **82** (1909) 172-175.

[2] KOUYUMDJIEV, C. N. A Calculation of Average Stress in Electrodeposits Based on the Bending of a Flat-plate Substrate. *Surface Technology* **26** (1) (1985), 35-43.

[3] KOUYUMDJIEV, C. N. Initial Stress in an Electrodeposited Layer Formed on a Bending Strip Cathode. *Surface Technology* **26** (1) 1985, 56-66.

[4] DOUNDAKOV, V. S., KOUYUMDJIEV, C. N. About Pheologic Processes Investigation in Electrodeposits. Transactions of the VII National Conference on Nondestructive Testing, 1992, International Scientific Centre, Varna.

[5] The VIMKE Software System for Finite Element Analysis. Documentation. Research Centre at the "Angel Kanchev" Technical University of Rousse, 1989.

[6] KOUYUMDJIEV, C. N. Residual Stress Distribution by the Bending Strip Method. *Surface and Coatings Technology*, **28** (1986), 39-55.

Presented at the 7th Congress on Theoretical and Applied Mechanics, Sofia, August 30 - September 1, 1993
section: Applied Mechanics