Journal of Theoretical
and Applied Mechanics
Sofia 1994–95, Year XXV No 4

STATICAL INVESTIGATION OF A DOUBLE–CURVED ARCH DAM, APPLYING THE METHOD OF LARGE FRAGMENTS (MLF)

HR. GANEV, CH. DIMITROV

Introduction

Deducing the General Moment Shell Theory with Variable Thickness

The most important theoretical and practical problem of the arch dam theory is the calculating of strain and stress state in a arbitrary point of a double curved arch dam, i.e. the determination of the full displacements vector-field – $[u(x,y), v(x,y), w(x,y)]^{\top}$. This is the purpose of the present paper. It is doubtless, that a most precise, closest to reality, mechano-mathematical model and at the same time comprehensive theory of arch dams can be created of the basis of the theory of shells with double curvature. According to the principles of the general moment theory of shells, as devises Vlassov-1949, the shell-curvature is one of the most essential and fundamental factors for the favorable statical (and dynamical) behaviour of these structures. Therefore this will be the theory of a shell with double curvature ($K_x = K_x(\alpha,\beta)$ and $K_y = K_y(\alpha,\beta)$) and thickness $h = h(\alpha,\beta)$, variable in either directions (Fig.1), arbitrary configuration, elastically clamped in the supporting contour (Fig.2) (Tölke-Vogt Method-1938) and free of any forces along the crest. Such an establishment of the problem could seem unresolvable and unpractical, but "nothing is more practical then a good substantiated and therefore true theory" – (Bolzman). The moment theory of shells, according to Vlassov's interpretition-1949 is built in a systematic and consistant manner only for shells with arbitrary middle surface, though with constant thickness. Nevertheless the differential equations of equilibrium, deduced in this theory, expressed in forces (normal forces N_1, N_2, tangential forces, S_1, S_2, bending moments M_1, M_2, twisting moments M_{12}, M_{21}, and transverse forces Q_1, Q_2) are valid for shells of both constant and variable thickness (Fig.1).

As a definite feature of this system of equilibrium equations is the fact, that the influence of the transverse forces Q_1 and Q_2 is included not only in the third and subsequent equations, but in the first two as well.

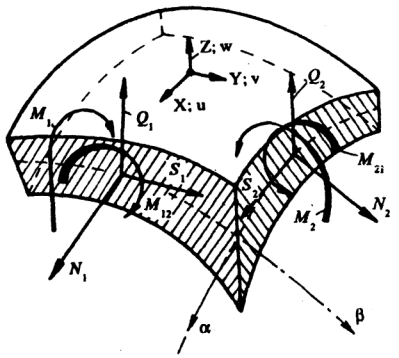
Z; w
Y; v
X; u
Q_1
Q_2
M_1
M_{21}
S_1
S_2
M_{12}
M_2
N_2
N_1
α
β

Fig. 1

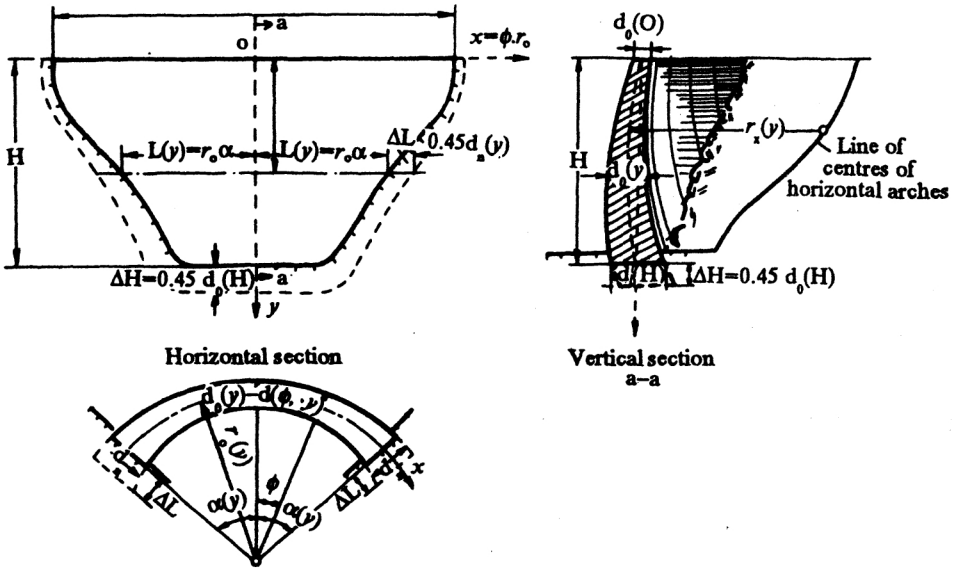
a
o
$x=\phi.r_o$
H
$L(y)=r_o\alpha$
$L(y)=r_o\alpha$
$\Delta L=0.45d_o(y)$
$\Delta H=0.45\ d_0(H)$
a
y
Horizontal section
$d_0(O)$
$r_x(y)$
Line of centres of horizontal arches
H
$d_0(y)$
$d_0(H)$
$\Delta H=0.45\ d_0(H)$
Vertical section
a–a
$d_0(y)$
$d(\phi,y)$
$r_o(y)$
$\alpha(y)$
ϕ
$\alpha(y)$
ΔL
ΔL
x

Fig. 2

All these formulae are necessary and sufficient for the elaboration of a mathematical theory of double-curved shells with variable thickness, analogous to the general bending theory of shells with constant thickness of Vlassov. This possibility is guaranteed by the fact, that the internal forces N_1, N_2, S_1, S_2, Q_1, Q_2, M_1, M_2, M_{12} and M_{21} are introduced by means of formulae, all of them refered to the middle (thickness-less) undeformed surface of the arch dam-shell and are functions of the curvilinear coordinates α, β. It should be borne in mind that $X(\alpha,\beta), Y(\alpha,\beta)$ and $Z(\alpha,\beta)$ are also components of the intensity of external loadings, referred to the middle (thickness-less) surface F and acting in fact along the external surface of the shell body. In this manner, both the geometric equations and the equilibrium conditions may be expressed through values characterizing the points of the middle surface F, and therefore they are indifferent with respect to the variability of the thickness of the arch dam

$$
\begin{aligned}
&\frac{\partial}{\partial\alpha}(BN_1) - N_2\frac{\partial B}{\partial\alpha} + \frac{\partial}{\partial\beta}(AS_2) + S_1\frac{\partial A}{\partial\beta} + ABK_1Q_1 + ABX = 0;\\
&\frac{\partial}{\partial\beta}(AN_2) - N_1\frac{\partial A}{\partial\beta} + \frac{\partial}{\partial\alpha}(BS_1) + S_2\frac{\partial B}{\partial\alpha} + ABK_2Q_1 + ABY = 0;\\
&-(K_1N_1 + K_2N_2) + \frac{1}{AB}\left[\frac{\partial}{\partial\alpha}(BQ_1) + \frac{\partial}{\partial\beta}(AQ_2)\right] + Z = 0;\\
&\frac{\partial}{\partial\alpha}(BM_{12}) - M_{21}\frac{\partial B}{\partial\alpha} - \frac{\partial}{\partial\beta}(AM_2) + M_1\frac{\partial A}{\partial\beta} - ABQ_2 = 0;\\
&\frac{\partial}{\partial\beta}(AM_{21}) - M_{12}\frac{\partial A}{\partial\beta} - \frac{\partial}{\partial\alpha}(BM_1) + M_2\frac{\partial B}{\partial\alpha} - ABQ_1 = 0;\\
&S_1 - S_2 + K_1M_{12} - K_2M_{21} = 0
\end{aligned}
\tag{1}
$$

shell. This variability of the thickness becomes relevant only through Hooke's physical law of arch dam shells, which together with the equilibrium differential dependences and the geometric differential dependences constitute the complete system of differential equations of the stress and strain state double-curvature arch dam shells with variable thickness $h = h(x, y)$. Here the indices x, y corresponding to the curvilinear coordinates x, y are introduced instead of indices 1,2 corresponding to the dimensionless curvilinear coordinates α, β. In fact x and y are only new designations of the independent curvilinear coordinates s_1 and s_2 — arch lengths along the lines α=const, and β=const. With the chosen system of coordinates with origin in the middle of the arch dam crown (Fig. 2), the independent variable $x \equiv s_1$ coincides with the line of horizontal curvatures K_x, while $y \equiv s_2$ coincides with the line of vertical curvatures K_y.

A new hypothesis, expressed through formulae concerning the geometry of the middle surface F and the postulatuon that $A = A(\alpha)$ and $B = B(\beta)$ is discussed, where, in a general case, $A = A(\alpha, \beta)$ and $B = B(\alpha, \beta)$ are the coefficient of the first quadratical form — Vlassov, 1949.

This geometrical hypothesis differs from the analogous though not identical hypothesis of Vlassov concerning shallow shells, is in accord to the equations of Codazzi-Gauss. It is much easier and logical to assume that the "parallels" s_1 and the "meridians" s_2 of the arch dam upon imaginary unfolding will be transformed correspondingly into Cartesian coordinates x, y of the middle surface thus unfolded in the plane.

$$
\begin{aligned}
N_x &= \frac{Eh(x,y)}{(1-\nu^2)}\left[\frac{\partial u}{\partial x} + \nu\frac{\partial v}{\partial y} + (K_x + \nu K_y)w\right] \\
N_y &= \frac{Eh(x,y)}{(1-\nu^2)}\left[\frac{\partial v}{\partial y} + \nu\frac{\partial u}{\partial x} + (K_y + \nu K_x)w\right] \\
S &= S_x = S_y = \frac{Eh(x,y)}{2(1+\nu)}\left[\frac{\partial u}{\partial y} + \frac{\partial v}{\partial x}\right] \\
M_x &= \frac{Eh^3(x,y)}{12(1-\nu^2)}\left[\frac{\partial^2 w}{\partial x^2} + \nu\frac{\partial^2 w}{\partial y^2} + (K_x^2 + \nu K_y^2)w\right] \\
M_y &= \frac{Eh^3(x,y)}{12(1-\nu^2)}\left[\frac{\partial^2 w}{\partial x^2} + \nu\frac{\partial^2 w}{\partial y^2} + (K_x^2 + \nu K_y^2)w\right] \\
M_{xy} &= M_{yx} = -\frac{Eh^3(x,y)}{12(1-\nu^2)}(1-\nu)\frac{\partial^2 w}{\partial x \partial y}
\end{aligned}
\tag{2}
$$

$$
\begin{aligned}
\frac{\partial N_x}{\partial x} + \frac{\partial S}{\partial y} + K_x\left(\frac{\partial M_{yx}}{\partial y} - \frac{\partial M_x}{\partial x}\right) + X &= 0 \\
\frac{\partial N_y}{\partial y} + \frac{\partial S}{\partial x} + K_y\left(\frac{\partial M_{xy}}{\partial x} - \frac{\partial M_y}{\partial y}\right) + Y &= 0 \\
-(K_x N_x + K_y N_y) - \left(\frac{\partial^2 M_x}{\partial x^2} + \frac{\partial^2 M_y}{\partial y} - 2\frac{\partial^2 M_{xy}}{\partial x \partial y}\right) + Z &= 0
\end{aligned}
\tag{3}
$$

If we substitute the stress-strain relation of Hook (2) and the latter in formulae (3), where the transverse forces Q_x and Q_y are substituted in advance in the first three equations, a final system of three differential equations will be obtained for double-curved arch dam-shell with variable thickness concerning the unknown displacement vector-field $[u(x,y), v(x,y), w(x,y)]^{\mathsf{T}}$ — equations

(4) as follows

$$
\begin{aligned}
L_{11}(u) + L_{12}(v) + L_{13}(w) &= X(x,y),\\
L_{21}(u) + L_{22}(v) + L_{23}(w) &= Y(x,y),\\
L_{31}(u) + L_{32}(v) + L_{33}(w) &= Z(x,y),
\end{aligned}
\tag{4}
$$

where L_{ij} $(i,j = 1,2,3)$ are the differential operators, obtained according to the shown final substitutions in formulae (2).

Some New Discrete Methods for Solving the Double Curved Arch Dam Shells

The problems of the continuum mechanics are methamatically described by means of a system of differential equations, i.e. continuously as well. But the problems for which it is possible to find solutions in a closed way — in Quadratures — are rather rare. This fact requires the creation of some numerical discretizational methods. Only by means of such methods and the introduction of computers is possible to investigate the complicated technical-mechanical problems. Obviously, such numerical discretizational mathematical methods could be the well-known *finite difference method* (**FDM**) or the *finite element methods* (**FEM**). While the very differential equations and their respective boundary conditions are approximated with a certain degree of accuracy by FDM by means of the so called "finite differences" (a typical mathematical discretization), by **FEM** the mathematical region of consideration is regarded as an assemblage of different, connected with each other subregions, called finite elements (a typical physical discretization). By **FDM** and **FEM** the whole internal mathematical region under consideration is inevitable discretionized and that requires a great number of finite differences (or finite elements) leading to a more or less dense internal mesh of the mathematical region. This discretization of great number of finite elements, on the boundary of which not all variable quantities and their derivatives are continuous, leads to the fundamental source of inaccuracy of the solution. Therefore an infinite augmentation of the density of the internal mash, by a linear approximation of the finite elements functions, does not guarantee augmentation of the accuracy of the solution. That is because the increase of the number of the linear algebraic equations increases the sensibility of their principle system matrix.

All this is the fundamental reason why many authors look for other approaches to solve the problem in such a way as to avoid the necessity of discretization of the internal mathematical region. As is shown by Leibenson-1951 there exist different variational functions by working out of approximate

solutions of the elastical equilibrium problems. If, the variational functions are not specially selected, solutions must be found, using the Lagrange's principle of virtual displacements, such as the *method of large fragments* (**MLF**) of Ganev-1978. By this method the variational functions are selected as continuous functions for the whole mathematical region "V" and the variational parameters are distributed along boundary "S" of the elastic body. This characteristic feature, using the Lagrange's principle for searching approximate solutions of the Elasticity Theory (**ET**) by means of the Ritz's method has its roots in the fact that the variation of the potential energy "δV" maintains both the statical boundary conditions and the equlibrium conditions in every point of the elastic body "V", where they are satisfied automatically (Leibenson-1951, p.185). That is why the transition of the continuous system equilibrium differential equations and the boundary statical conditions into the discrete system of linear algebraic equations of the **MLF** by means of the Lagrange's variational principle is in fact equivalent to the transition of the same continuous differential equations into a system of linear algebraic equations by means of the boundary integral equations (Brebia, Butterfield-1978). This is the reason why the author of MLF finds some grounds to claim that his *method of large fragments* (**MLF**) — having used Lagrange's principle and this of *boundary elements method* (**BEM**), are not only formal, but from their mechanic-mathematical essence, are also equivalent, i.e. identical. The formally different approach of discretization of the problem not only cannot influence the solution,but the identicity exists in the system of linear algebraic equations, as well as under the condition that the same variational parameters, distributed at the same points of the boundary "S", are selected. An essential advantage of **MLF** — compared to the **BEM**, rooting from its different derivation from the Lagrange's variational principle, is the fact that the principle system matrix of the linear algebraic equations is always symmetrical and positively determined. This makes it possible to investigate not only statical, but dynamical problems, as well as problems of stability. Another advantage of **MLF** in comparison to **BEM** is that there is no limitation of the **MLF**, the investigated mathematical region under consideration to be absolutely homogeneous and isotropic.

Essence and Evolution of the Idea of the Method of Large Fragments for Double-Curved Arch Dam

It is possible to generalize the **FEM** for expressing the strain and stress state of all the continuous mathematical region without its physical discretization in finite elements. In this way we come to the *method of large fragments* (**MLF**). It represents a logical — development of **FEM** and at the same time

it is its formal opposite. The mathematical region under consideration is not divided, even fictitiously into separate elements (although finite), but it is presented, by a simple fragment — polygonal approximation of the entire bidimensional mathematical region. It is a variational method based also on the Lagrange's principle and since it is a logical development of the already well known **FEM**, all formal features of the matrix expression of all dependences are used. The **MLF** is a discrete method not because of any imaginary discretization on the examined mathematical region, in which the displacement functions of separate finite elements are studied, but because the same functions are — approximated interpolationally (though continuous and smooth until the n-th order) by means of a finite number of smooth interpolation functions for the entire region. At the beginning complete ordinary n-th degree polinomial $[P_n(x, y)]$ is accepted for the entire — bidimensional region, which may be represented in the most general case by a closed N-gonal, consisting partially of right and partially of curved sides (Ganev-1971,1975).

As is shown one can derivate the formula for the relation between the number of poligonal sides N of the curvilinear N-gonal and the degree "n" of the complete ordinary polynomial

$$n \geq 2N - 3. \tag{5}$$

As can be seen from (5), by $N = 3$ one receives $n = 3$ as it was a – triangle. If by (5) one accepts the degree n with 1 unit greater – within the region are to be distributed N internal nodal points; if one accepts by (5) with 2 units greater – $2N$ internal nodal points and only when the equality of (5) is persisted – $n = 2N - 3$, interne in the centre of gravity of the closed curvilinear (in a general case) N-gonal is to be placed one nodal point. All these internal parameters can be distributed on the boundary of the N-gonal, but only as some normal derivatives of the displacement vector to the boundary closed N-gonal.

Now it is no longer difficult to generalize all these results to the more general problem - the bidimensional spatially loaded shell.

Later it will be easy, by means of mathematical limit transition (formula (17) , to receive the corresponding formulae of the two components of the shell problem: (A) the problem of **ET** with variable thickness and (B) the bending problem of the spatially loaded plate with variable thickness (Ganev-1971, 1975 and 1990).

It is rational to introduce and use here the special orthogonal Legendre's polynomial algebraic functions by means of which it will be possible to

obtain the bidimensional algebraic polynomials, determined as follows:

$$[G_n(x,y)] = [LP_i(x).LP_j(y)], \quad (i+j \leq n) \tag{6}$$

where $[LP_i(x)]$ and $[LP_j(y)]$ are the Legendre's orthogonal polynomials, each one for the variables x and y. As is well known the Legendre's polynomials are defined as a solution of the Legendre's differential equation:

$$(1-x^2).w''(x) - 2x.w'(x) + n(n+1)w(x) = 0, \tag{7}$$

containing the free parameter "n". The recurrent formulae for obtaining a solution for arbitrary free parameter "n" are:

$$LP_{n+1}(x) = \frac{2n+1}{n+1} x LP_n(x) - \frac{n}{n+1} LP_{n-1}(x), \tag{8}$$

where the first three solutions for $n = 0, 1, 2$ are

$$LP_0(x) = 1; \quad LP_1(x) = x; \quad LP_2(x) = \frac{1}{2}(3x^2 - 1). \tag{8a}$$

The number of the bidimensional polynomial matrix defined by (7), likely for the complete ordinary polynomials $[P_n(x,y)]$ by means

$$k = (n+1).(n+2) : 2! \tag{9}$$

The deducing of all the necessary formulae of **MLF** is analogical to those with $[P_n(x,y)]$ — the complete ordinary polynomials. The field of the displacement vector of the whole mathematical region closed in the curvilinear N-gonal fragment is to be obtained as follows:

$$\begin{Bmatrix} U_n(x,y) \\ (3.1) \end{Bmatrix} = \begin{Bmatrix} u(x,y) \\ v(x,y) \\ w(x,y) \\ (3.1) \end{Bmatrix} = \begin{bmatrix} DG_n(x,y) \\ (3.3k) \end{bmatrix} . \begin{bmatrix} DA_n^{-1} \\ (3k.3k) \end{bmatrix} . \begin{Bmatrix} u_i \\ v_i \\ w_i \\ (3k.1) \end{Bmatrix}, \tag{10}$$

where the diagonal rectangular $(3.3k)$ matrix

$$\begin{bmatrix} DG_n(x,y) \\ (3.3k) \end{bmatrix} = \begin{bmatrix} [G_n(x,y)] & 0 & 0 \\ (1.k) & & \\ 0 & [G_n(x,y)] & 0 \\ & (1.k) & \\ 0 & 0 & [G_n(x,y)] \\ & & (1.k) \end{bmatrix}; \tag{11}$$

the relevant number quadrilateral diagonal $(3k, 3k)$ matrix

$$\begin{bmatrix} DA_n^{-1} \\ (3k.3k) \end{bmatrix} = \begin{bmatrix} [G_n(x_i,y_i)]^{-1} & 0 & 0 \\ (k.k) & & \\ 0 & [G_n(x_i,y_i)]^{-1} & 0 \\ & (k.k) & \\ 0 & 0 & [G_n(x_i,y_i)]^{-1} \\ & & (k.k) \end{bmatrix} =$$

(12)

$$= \begin{bmatrix} A_n^{-1} & 0 & 0 \\ (k.k) & & \\ 0 & A_n^{-1} & 0 \\ & (k.k) & \\ 0 & 0 & A_n^{-1} \\ & & (k.k) \end{bmatrix}$$

and $[u_i, v_i, w_i]^T$ are the generalized variational free parameters.

In this way the definition of the displacement vector field $u(x,y)$, $v(x,y)$ and $w(x,y)$ as continuous functions for all the region of the middle shell surface is substituted by the interpolation problem (10) of determining the matrices of the free variational parameters $[u_i, v_i, w_i]^T$, distributed on boundary of the curvilinear (in a general case) N-gonal contour. This is to be done using the Lagrange's principle of virtual displacements

$$\delta V = \iiint (X\delta u + Y\delta v + Z\delta w)\,\rho dx dy dz + \iint (\bar{X}\delta u + \bar{Y}\delta v + \bar{Z}\delta w)\,.dS. \tag{13}$$

Using the formula (6), by means of which are to be expressed in matrix form all the internal forces and moments from the well-known dependences of the general theory of shells

(14)

$$[N_x N_y N_{xy} M_x M_y M_{xy}]^T = \begin{bmatrix} D_M & 0 \\ 0 & D_p \end{bmatrix} \cdot \begin{Bmatrix} \Theta(x,y) \\ K(x,y) \end{Bmatrix} = [D_{MP}] \cdot \begin{Bmatrix} \Theta(x,y) \\ K(x,y) \end{Bmatrix}$$

where membrane and the plate stiffness matrices are

$$\begin{bmatrix} D_M \\ (3.3) \end{bmatrix} = \frac{Eh(x,y)}{(1-\nu^2)} \cdot \begin{bmatrix} 1 & \nu & 0 \\ \nu & 1 & 0 \\ 0 & 0 & \frac{1-\nu}{2} \end{bmatrix}; \tag{15}$$

$$\begin{bmatrix} D_P \\ (3.3) \end{bmatrix} = \frac{Eh^3(x,y)}{12(1-\nu^2)} \cdot \begin{bmatrix} 1 & \nu & 0 \\ \nu & 1 & 0 \\ 0 & 0 & \frac{1-\nu}{2} \end{bmatrix}, \tag{16}$$

containing the variable thickness of the shell $h = h(x, y)$ and then the deformation matrix $[\Im(x, y)K(x, y)]^{\mathsf{T}}$ could be expressed by means of the operational matrix of the shell

$$(17)\qquad \begin{bmatrix} \Im & 0 \\ K & 0 \\ (\ 6.3) \end{bmatrix} = \begin{bmatrix} \partial/\partial x & 0 & K_x(x,y) \\ 0 & \partial/\partial y & K_y(x,y) \\ \partial/\partial y & \partial/\partial x & 0 \\ 0 & 0 & -[\partial^2/\partial x^2 + K_x^2] \\ 0 & 0 & -[\partial^2/\partial y^2 + K_y^2] \\ 0 & 0 & -2\partial^2/\partial x \partial y \end{bmatrix}$$

by means of the formula

$$(18)\qquad \begin{bmatrix} \tilde{\Im}(x,y)\tilde{K}(x,y) \\ (6.1) \end{bmatrix}^{\mathsf{T}} = \begin{bmatrix} \Im & 0 \\ K & 0 \\ (\ 6.3) \end{bmatrix} \cdot \begin{bmatrix} DG_n(x,y) \\ (3.3k) \end{bmatrix} \cdot \begin{bmatrix} DA^{-1} \\ (3k.3k) \end{bmatrix} \cdot \begin{Bmatrix} u_i \\ v_i \\ w_i \\ (3k.1) \end{Bmatrix}.$$

Then the variation of the potential energy could be expressed as follows:

$$\delta V = \begin{bmatrix} DA_n^{-1} \\ (3k.3k) \end{bmatrix}^{\mathsf{T}} \cdot \int\int \begin{bmatrix} \tilde{E}(x,y)\tilde{K}(x,y) \\ (3k.6) \end{bmatrix}^{\mathsf{T}} \cdot \begin{bmatrix} D_{MP} \\ (6.6) \end{bmatrix} \cdot$$

$$(19)\qquad \cdot \begin{bmatrix} E(x,y)K(x,y) \\ (6.3k) \end{bmatrix} \cdot \begin{bmatrix} DA_n^{-1} \\ (3k.3k) \end{bmatrix} \cdot \begin{Bmatrix} u_i \\ v_i \\ w_i \\ (3k.1) \end{Bmatrix},$$

or if we define with

$$\begin{bmatrix} L_n \\ (3k.3k) \end{bmatrix} =$$

$$(20)\qquad = \begin{bmatrix} DA_n^{-1} \\ (3k.3k) \end{bmatrix} \cdot \int\int \begin{bmatrix} \tilde{E}\tilde{K} \\ (3k.6) \end{bmatrix}^{\mathsf{T}} \cdot \begin{bmatrix} D_{MP} \\ (6.6) \end{bmatrix} \cdot \begin{bmatrix} \tilde{E}\tilde{K} \\ (6.3k) \end{bmatrix} dxdy \cdot \begin{bmatrix} DA_n^{-1} \\ (3k.3k) \end{bmatrix}.$$

Substituting (19) and (20) in the Lagrange's principle of virtual displacements (13), we could obtain the full system of linear algebraic equations

$$(21)\qquad \begin{bmatrix} L_n \\ (3k.3k) \end{bmatrix} \cdot \begin{Bmatrix} u_i \\ v_i \\ w_i \\ (3k.1) \end{Bmatrix} = \begin{Bmatrix} R_{in} \\ (3k.1) \end{Bmatrix},$$

where the expressed in (20) matrix $[L_n]$ is the stiffness matrix of the whole middle surface of the shell and the right load matrix of (21) is to be calculated by the following formula

$$(22)\quad \left\{ \begin{array}{c} R_{in} \\ (3k.1) \end{array} \right\} = \left[\begin{array}{c} DA_n^{-1} \\ (3k.3k) \end{array} \right]^{\mathsf{T}} \cdot \iint \left[\begin{array}{c} DG_n(x,y) \\ (3k.k) \end{array} \right]^{\mathsf{T}} \cdot \left\{ \begin{array}{c} X\rho + \bar{X}\nu \\ Y\rho + \bar{Y}\nu \\ Z\rho + \bar{Z}\nu \\ (k.1) \end{array} \right\} dxdy,$$

containing both the mass loading $[X\rho, Y\rho, Z\rho]^{\mathsf{T}}$ and the loading on the middle surface of the shell $[\bar{X}\nu, \bar{Y}\nu, \bar{Z}\nu]^{\mathsf{T}}$. The integration of (20) and (22) are to be done on the whole middle shellsurface. According to the integrational calculation the integrals are to be obtained as a sum of separate integrals of the subregions containing all the mathematical region, closed in the "curvilinear" N-gonal.

It must be noted here, that the introduced by means of formula (6) new special bidimensional complete polynomial matrix $[G_n(x,y)]$ has some advantages compared to the ordinary complete polinomial $[P_n(x,y)]$. A particulary favourable quality of the Legendre's polinomial functions entering in (6) is that they are limited (restricted) functions even on the high degree "n", and that they vary in the interval $(-1,1)$. This helps the number realizations to avoid the error accumulation by rounding the different quantities. Besides, as it is to be seen from recurrent formulae (7), the received special bidimensional complete polynomial matrices (6) – $[G_n(x,y)]$ can be comparatively more easily used than the ordinary complete polinomials $[P_n(x,y)]$ for stable inversion of the matrices A_n, because they enter in the system of formulae (10) $\div$ (21) of the **MLF**, even for N-gonal with "parallel" sides by means of light bending of one of those "parallel" sides Fig. 3; (Ganev - 1990).

Illustrative Example (Pattern) of MLF, its Effectiveness and a Comparison of MLF and BEM

Here it is question of a real project of double curved arch dam in Bulgaria, called "Cherny Ossam", as one of the investigated variant (concrete gravity dam, rock embarkment dam, concrete buttress dam and so on). The most important facts of this project are shown in the following Figures (4,5) and on the Photo of its model (in Scale 1:1000).

Fig. 4 is analogical to Fig. 2 and represents the double curved arch dam – shell of "Cherny Ossam", unfolded in plane as trapezium – like "plate" with variable tickness-Ganev 1965. Thus for this trapezium-like curvilinear quadralateral (Fig. 4) according to formula (5) – $n \geq 2N - 3$, one can obtain the degree of the bidimensional algebraic approximational polynomials,

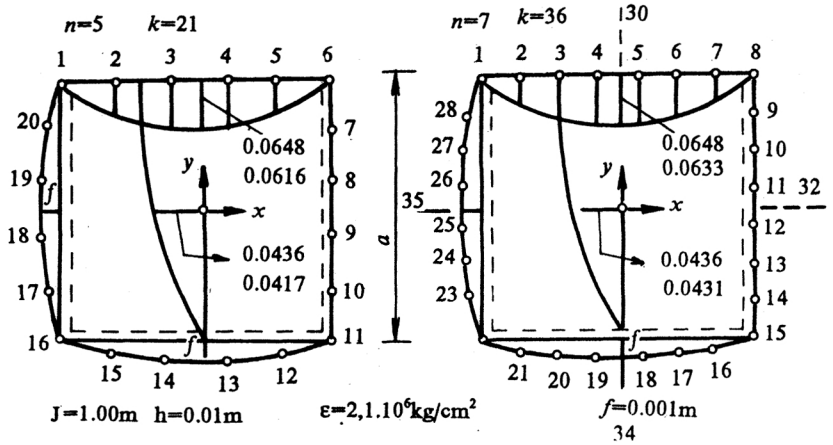
n=5 k=21
n=7 k=36
0.0648
0.0616
0.0436
0.0417
0.0648
0.0633
0.0436
0.0431
J=1.00m h=0.01m
ε=2,1.10⁶kg/cm²
f=0.001m

Fig. 3

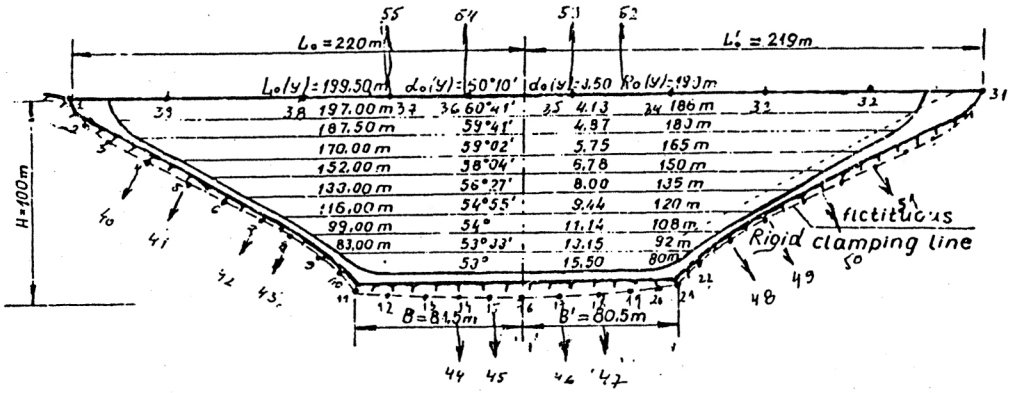
L₀=220m
L₀'=219m
H=100m
B=84.5m
B'=80.5m
fictitious
Rigid clamping line

Fig. 4

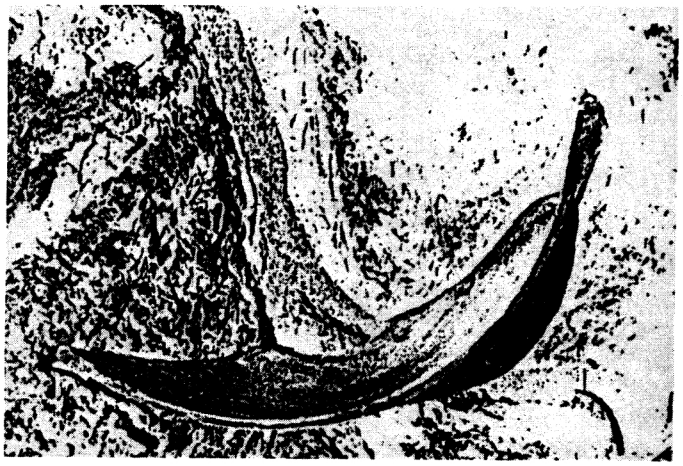

"Cherny Ossam" – Photo of its model in scale 1:1000

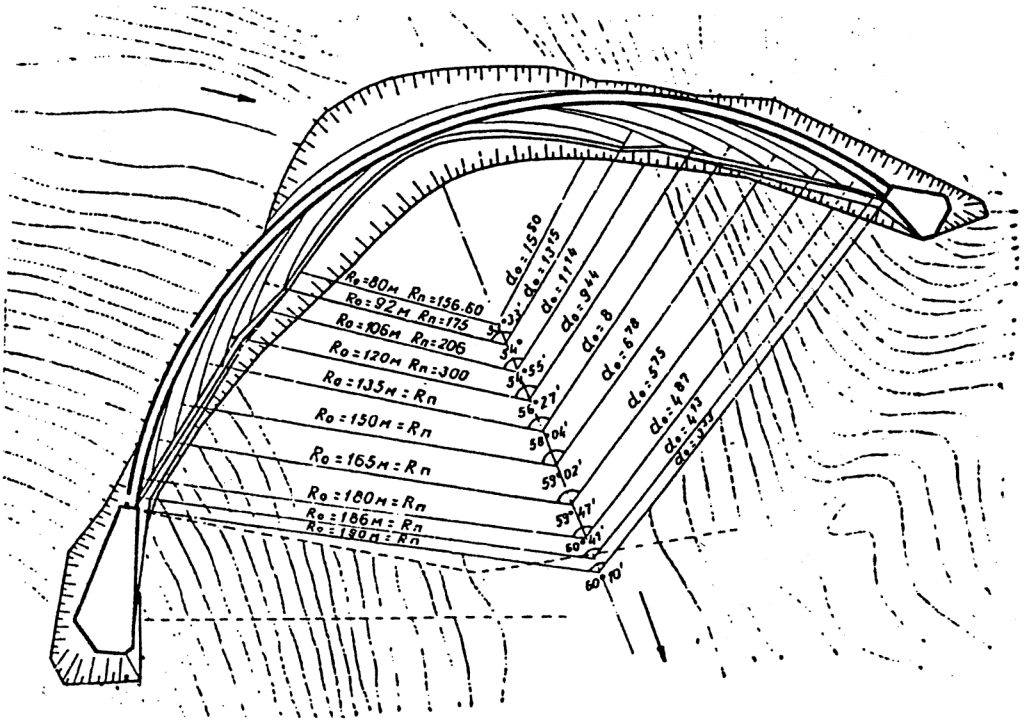

Fig. 5

using the special orthogonal Legendre's algebraic functions, following formula (6) and the recurent formula (8) for obtaining all the necessary Legendre's

functions for arbitrary parameter "n". In our case for the curvilinear quadra lateral trapezium-like closed polygon, according (6) one finds "n"≥ 5. For reason of a better, but sufficient exact approximation, in our case, was selected "n"$= 9$. Then according to formula (9) – $k = (n+1).(n+2) : 2!$, and the selected sufficient optimal degree "n"$= 9$ one obtain the number of the complete special algebraic polynomials (6) – $k = 55$. All these 55 parameters are to be distributed only on the boundary curvelinear trapezium contour line (the fictituous rigid clamping line and the right crest) as follows: 4 corner functions parameters (number 1,11,21,31), 35 contour functions parameters (27 functions on the curvilinear lines of trapezium and 8 functions on the right crest) all together 39 functions-parameters. The remaining (to 55) 16 parameters are distributed also on the boundary of the curvilinear quadralateral, but also first normal derivatives to the curvilinear trapezium: 4 normal derivatives on the crest, 4 normal derivatives on the basis of the trapezium, and 4 of every inclined sides of the trapezium. The full field of the displacement vector $u(x,y), v(x,y), w(x,y)$, according formula (11), is approximated by means of a diagonal rectangular matrix containing the same row-matrix (6) in the diagonal of the $(3.3k)$ rectangular matrix (11), so that the final unknown generalized variational free parameters $[u_i, v_i, w_i]^T$ are to be $3 \times 55 = 165$. But since a great number of these unknown parameters on the supporting contour of the shell are to be get to zero in accordance with the geometrical boundary conditions, finally the real unknown parameters remain 60 but not 165. In this manner, following the formulae (11)÷(23), i.e. the algoritm of prescribed matrix-actions, one can obtain, file by file, short, clear and well compiled computer programme and at the end flow-chart (from Start to Stop) for investigation of a double curved arch dam. The presented programme compiled in FORTRAN 77 provides possibility for taking into account all static effects of the shell structure. The characteristic feature which must be shortly described here is the elaboration of the integration in formula (20) – the stiffness matrix – and in formula (22) – the loading matrix of whole middle surface of the shell. According to the integrational calculation the integrals (20) and (22) are to be obtained as a sum of separate integrals of a great number of triangle subregions expressing the whole middle and unfolded surface of the shell by means of Hanmer's and Stroud's method – 1958 (see explaination Fig. 6 of the symmetrical half of all the mathematical region, closed in the "curvilinear" trapezium). In the next Fig. Fig. 7÷ 10 are graphically expressed the main results of the obtained solution of the investigated arch dam "Cherny Ossam".

At the end the following conclusions have been noticed:

1) Both MLF and BEM are discretizational methods, reducing the

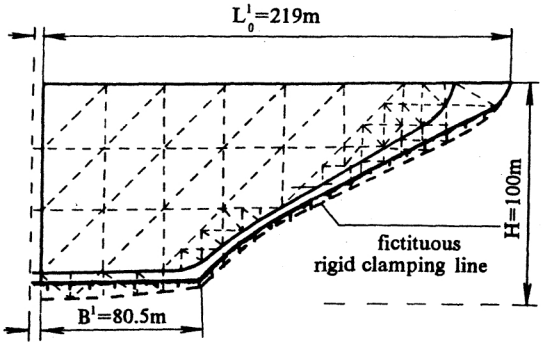

Fig. 6

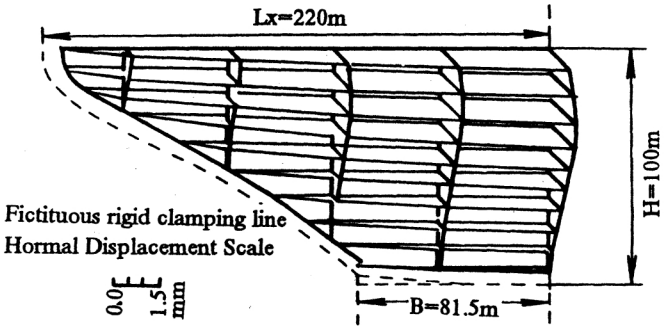

Fig. 7

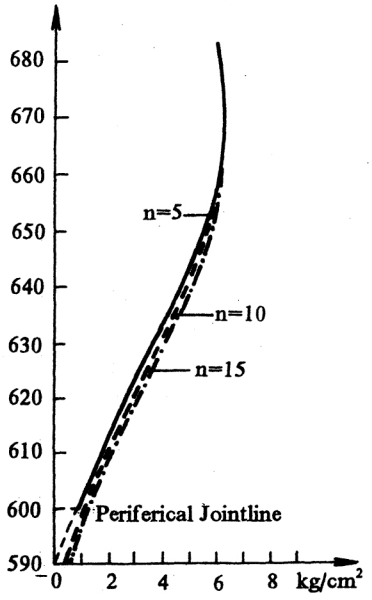

Fig. 8

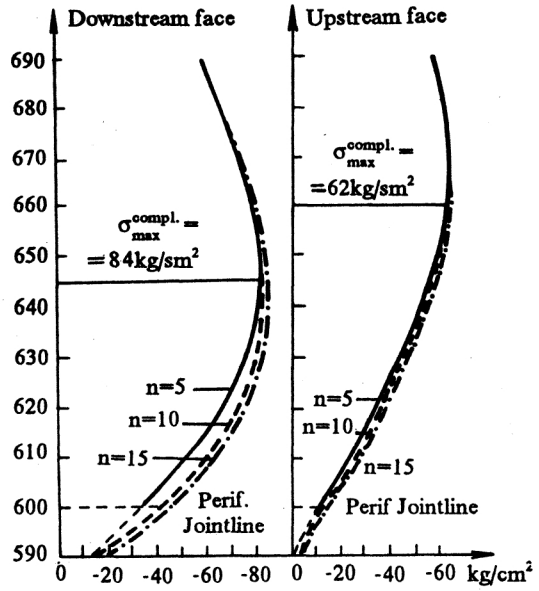
Downstream face
Upstream face
690
680
670
660
650
640
630
620
610
600
590
$\sigma_{max}^{compl.}$ = =84kg/sm²
$\sigma_{max}^{compl.}$ = =62kg/sm²
n=5
n=10
n=15
Perif. Jointline
Perif Jointline
0 -20 -40 -60 -80 0 -20 -40 -60 kg/cm²

Fig. 9

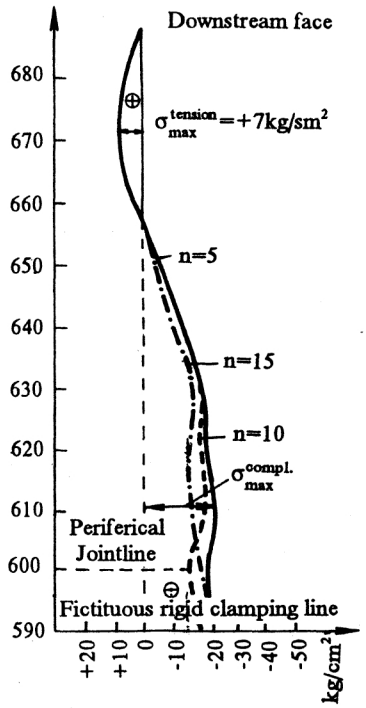
Downstream face
680
670
660
650
640
630
620
610
600
590
$\sigma_{max}^{tension}$ =+7kg/sm²
n=5
n=15
n=10
$\sigma_{max}^{compl.}$
Periferical Jointline
Fictituous rigid clamping line
+20 +10 0 -10 -20 -30 -40 -50 kg/cm²

Fig. 10

technical problems of a continuous system of a differential equations to a system of linear algebraic equations.

2) Both by MLF and BEM the unknown parameters of the problem are distributed only on the boundary of the considered mathematical region and their number is considerably lower compared to the corresponding number, when investigating by means of FEM or FDM. The fact that the displacement vector field $\{U(x;y)\}$ is approximated for the whole studied mathematical region by a continuous interpolational polynomial matrix $[DG_n(x,y)]$ of n-th degree – formula (11) – follows the continuity of the $\{U(x,y)\}$ for every point of this field. This is one of the principle reasons for the high efficiency of MLF in spite of the decreased number of the unknown free variational parameters in comparison to the corresponding FEM and FDM.

3) Both by MLF and BEM the system of linear algebraic equations is full and the principle matrix is not a bandmatrix but a full quadratic matrix (in some cases "rarely populated"). Thanks to the considerable decreasing of the number of the real unknown parameters, however, this quadratic principle system matrix (thanks to the boundary geometrical homogeneous conditions) is of a very small size and that is why the solving of the equations is more accurate and takes less machine time. Evident are the results for the presented here example for the investigation of the double curved arch dam "Cherny Ossam".

4) On the basis of the shown points $1 \div 3$ it can be concluded that there exists a full equivalence (i.e. coincidence) between the MLF and the BEM. There exists, however, same definite advantages of MLF compared to BEM. They consist not only in the considerably more simplified way of deducing the system of linear algebratic equations, but MLF can be used when studying anisotropic bodies as well.

REFERENCES

[1] Brebia, C. A., R. Butterfield. The Formal Equivalence of the Direct and Indirect Boundary Methods. *App. Math. Modelling*, No 2 (1978).

[2] Ganev, H. G. A New Method of Calculating Arch Dams as Plates Lying on a Elastic Foundation, Theory of Arch Dams. London, Pergamon Press, 1965.

[3] Ganev, H. G. On Some New Discretization Methods of Solving the plane Problem of Elasticity. *Bul. Inst. Techn. Mech. BASc*, Vol. VIII (1971), Sofia.

[4] Ganev, H. G. A New Treatment of the Finite Element Method and a Method of Large Fragments. *T. A. M., BASc*, No 4 (1975) Sofia.

[5] GANEV, H. G. On Some Equivalence of the Method of Large Fragments (MLF) and the Boundary Elements Method (BEM), Providing Generalization and Enlargement of the BEM. *T. A. M., BASc*, No **4** (1990), Sofia.

[6] HAMMER, P. C., A. H. STROUD. Numerical Evaluation of Multiple Integrals, Math. Tables Aids Comp., **12**, 1958.

[7] LEIBENSON, L. S. Colected Works, Vol. **1**. Izd. Akad. Nauk SSSR, Moskow, 1951, (in Russian).

[8] TÖLKE, F. Talsperren, Staudämme und Staumauern, Berlin Springer, 1938.

[9] VLASSOV, V. Z. General Theory of Shells, Moskow, 1949, (in Russian).

[10] VOGT, F. Ûber die Berechmung der Fundament Deformation, Oslo, Det Narske Hidenskaps Akademi, 1925.